CATALOG NUMBER	
PROJECT	
TYPE	

DRKS2

1X2 LED Darkroom Safelight
Two Compartment

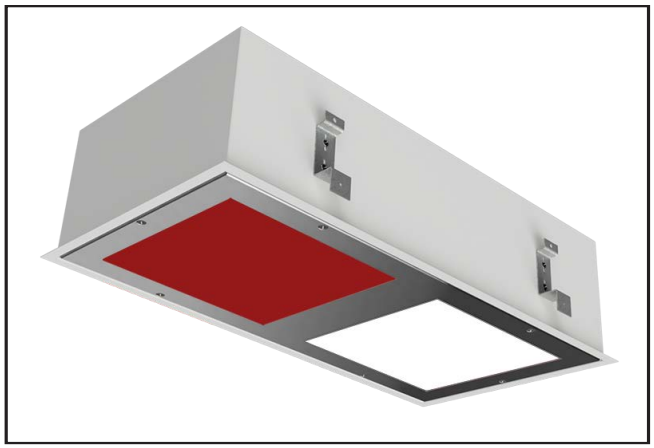

SPECIFICATIONS

DESCRIPTION
The DRKS2 is an LED darkroom safelight designed specifically for film development or scientific laboratories. Featuring 2 compartments, each available with Red, Red/White, Amber, Amber/White, Green, and Green/White non-filtered narrow spectrum LEDs.

CONSTRUCTION
Constructed of a 20 gauge CRS housing with an 18 gauge polished stainless steel door frame. Gasket seals door frame to housing. Door frame secured to housing with stainless steel aircraft cables and captive flush mounted stainless steel fasteners. Highly reflective white polyester powdercoat finish.

LEDS
Colored LEDs available in red (660nm), green (540nm), and amber (590nm) light spectrums. Each compartment is available with solid color LEDs, or colored LEDs and a separately switched and dimmable white light source (80 CRI, 4000K).

ELECTRICAL SYSTEM
Each color features a dedicated 0-10v 1% dimming driver. Consult factory if other dimming options are needed.

OPTICAL SYSTEM
Prismatic acrylic lens, with prismatic polycarbonate lens option available. Consult factory for additional lens options.

MOUNTING
Available in recessed grid, recessed flange, and surface mount mounting.

WARRANTY
5 - Year Limited Warranty. Complete warranty and terms located at: www.aelnow.com/warranty

LED	Lumens	Wattage	Wavelength
White	1400	10	N/A
Red	51	4.2	660nm
Amber	85	4.4	590nm
Green	170	4.5	540nm

ORDERING INFORMATION

Example: DRKS2-L-REDW-RED-M

Series	Mounting	Compartment One	Compartment Two	Voltage	Options
DRKS2 1x2	**L** Lay-in Grid **F** Recessed Flanged **S** Surface **SD** Suspended	**AMB** 590nm **AMBW** 590nm & 4000K CCT **RED** 660nm **REDW** 660nm & 4000K CCT **GRN** 540nm **GRNW** 540nm & 4000K CCT	**AMB** 590nm **AMBW** 590nm & 4000K CCT **RED** 660nm **REDW** 660nm & 4000K CCT **GRN** 540nm **GRNW** 540nm & 4000K CCT **WHT** 4000K CCT White	**M** Multi-Volt (120-277V)	**WDF** Door Frame Painted White **TP** Tamper Proof Fasteners **PA125** Prismatic Polycarbonate Lens **AM** Anti-Microbial White Paint

DRKS2

1X2 LED Darkroom Safelight Two Compartment

LINE ART

GRID/FLANGE

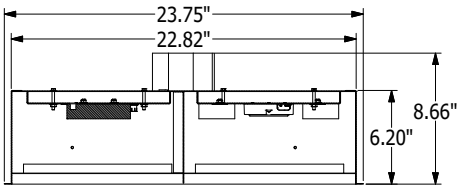
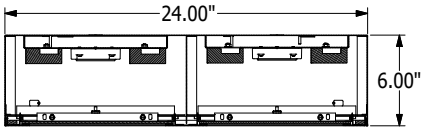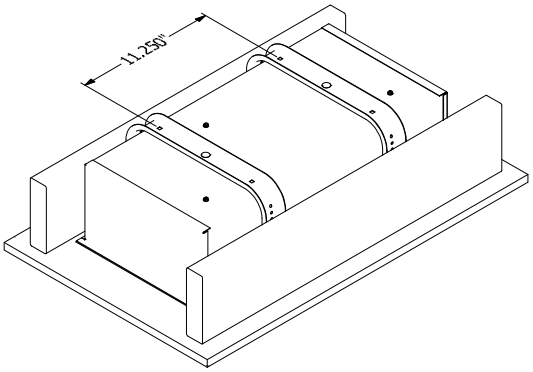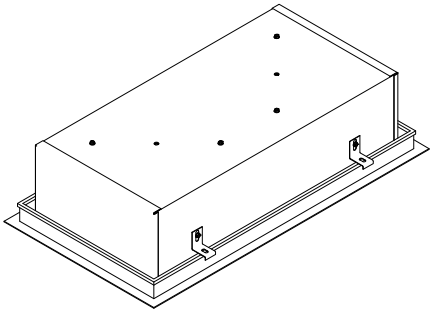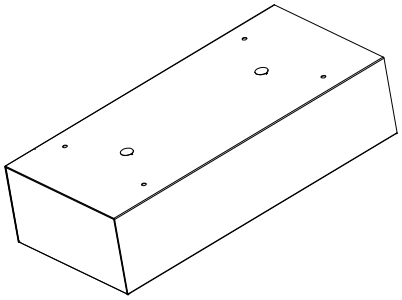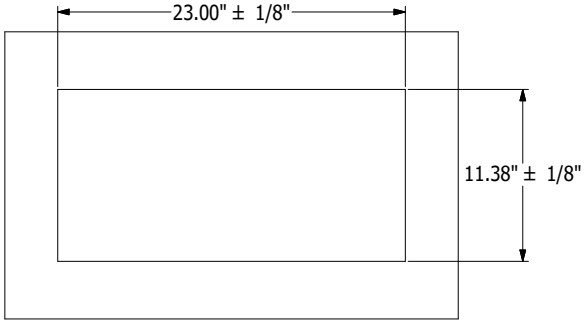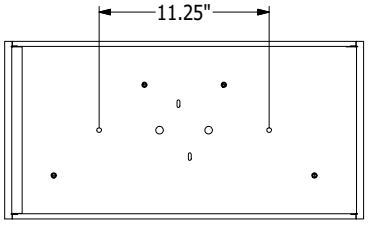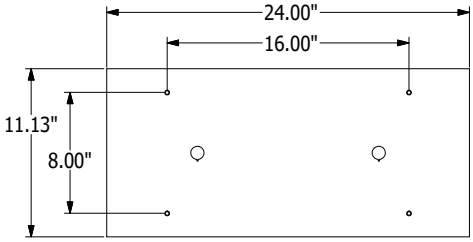
SURFACE