ADVANTAGE ENVIRONMENTAL LIGHTING

MADE IN THE USA

CATALOG #:

PROJECT:

TYPE:

CRGBW

RGB AND TUNEABLE WHITE LED FLAT PANEL

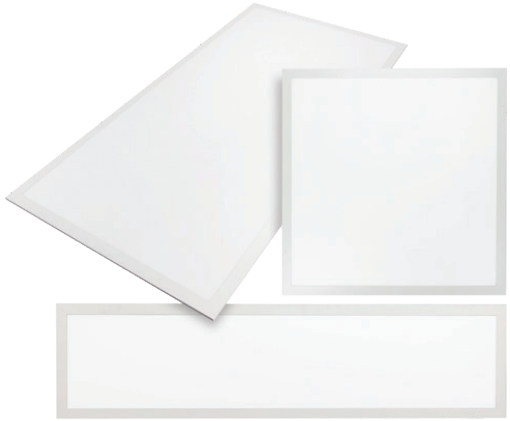

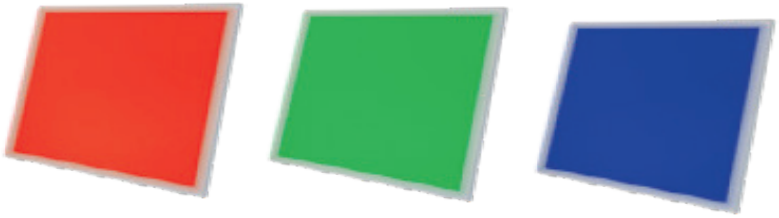

PRODUCT SPECIFICATIONS

DESCRIPTION: The CRGBW series is an extremely thin design flat panel that provides even illumination across the entire panel with no visible hot spots or shadows. Available in 1x4, 2x2, and 2x4 sizes. RGBW capability allows the color to be changed by handheld RGB remote controller with HCONT controller, or by an addressable DMX decoder for DMX512 control (controller supplied by others). Tuneable white LED range of 2800K-6500K. Up to 6 panels can be controlled by the handheld remote when installed in the same room.

CONSTRUCTION: Aluminum frame with seamless corners. Enlarged junction box to facilitate connections.

APPLICATIONS: The versatile CRGBW series perfect for setting a mood in offices, schools, government buildings, commercial applications, and any application that requires more than a standard white flat panel.

OPTICAL SYSTEM: PMMA GLP and Polycarbonate diffuser. Diffusion plate with more than 90% light transmittance. Acrylic light guide for even illumination.

ELECTRICAL SYSTEM: 120-277VAC, 50/60Hz, Output 24VDC. 36W (1x4 and 2x2), 60W (2x4). Available with LED driver and handheld RGB controller, or addressable DMX decoder for DMX512 control. Operating temperatures: -20°C to 50°C (-4°F to 122°F).

MOUNTING: This fixture is designed for recessed mounting for T-bar ceiling installation. Suspended and surface mount kits are available

WARRANTY: 5-Year Limited Warranty. Complete warranty and terms located at **www.aelnow.com/warranty**.

ORDERING INFORMATION

Example: CRGBW14-S-S-M-D-FK22

SERIES		OUTPUT		VOLTAGE		CONTROLLER		OPTIONS	
CRGB1W14	1x4	S	Standard	M	Multi-Volt (120-277VAC)	DMX	Addressable DMX Decoder for DMX512 Control (Controller Supplied by Others)	SMS14	1x4 Surface Mount Shroud
CRGB1W22	2x2					HCONT	Simple Handheld RGBW Controller	SMS22	2x2 Surface Mount Shroud
CRGB1W24	2x4							SMS24	2x4 Surface Mount Shroud
								FK14	1x4 Flange Kit
								FK22	2x2 Flange Kit
								FK24	2x4 Flange Kit
								CMK	Cable Mount Suspension Kit

ADVANTAGE ENVIRONMENTAL LIGHTING

CATALOG #:	
PROJECT:	
TYPE:	

Line Art

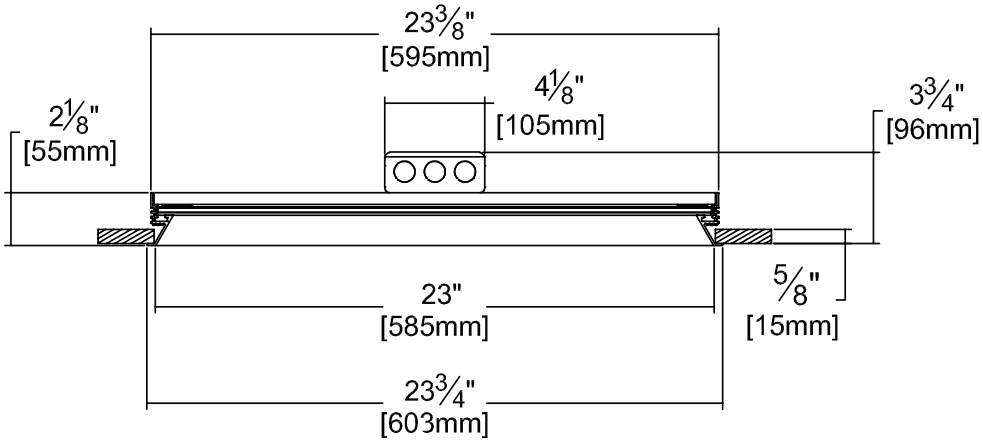

Specifications

Configuration	CRGBW14	CRGBW22	CRGBW24
Dimensions	1' x 4'	2' x 2'	2' x 4'
Wattage (W)*	36W	36W	60W
CCT (K)		R: 620-630nm G: 515-525nm B: 465-470nm W: 2800K-6500K CCT	
Lumens (lm)	2700-3060	2700-3060	4500-5100
Efficacy (LPW)		80-85	
CRI		≥82	
Input Voltage		120-277VAC, 50/60Hz	
Operating Temp		-20°C to 50°C (-4°F to 122°F)	
Certifications		ETL Listed, CE, IP40 Rated	
Warranty		5 Years	

Note: Environment and application will affect performance. Typical values and 25°C used for testing. Specifications subject to change without notice.