Advantage.
Environmental Lighting

CNXEMU

LED NEMA4X/NSF
Exit & Emergency Combo

STANDARD | *OPTIONAL*

UL LISTED · WET · ALL LED · MOUNTING CANOPY · NEMA · NSF · SELF DIAGNOSTIC · COLD · TAMPER PROOF

ILLUMINATION

- *Two fully adjustable, ultra bright 3.3 watt high performance MR-16 base LED lamp heads for optimized center-to-center spacing.*
- *Long-life, energy efficient Red or Green LED EXIT sign illumination.*

ELECTRICAL

- *Dual 120/277 voltage.*
- *Unique bi-color LED indicator light alerts occupant on battery condition (Green-normal, Red-check-battery).*
- *Charge rate/power "ON" LED indicator light and magnetic test switch for mandated code compliance testing.*
- *6V/12V maintenance-free, rechargeable NiCd battery (12W, 15W models).*
- *6V/12V maintenance-free, rechargeable sealed lead acid battery (28W model).*
- *Offers 4.8W, 7.8W, 20.8W of remote capacity (6V/12V DC output) standard on the 12W, 15W and 28W models.*
- *Internal solid-state transfer switch automatically connects the internal battery to LED board and lamp heads for minimum 90-minute emergency illumination.*
- *Fully automatic solid-state, two-rate charger initiates battery charging to recharge a discharged battery in 24 hours.*

MOUNTING

- *Universal knockout pattern on back provided with gasket for watertight seal for back mount.*
- *Polycarbonate mounting canopy included for top or end mount.*

HOUSING

- *Housing is reinforced polycarbonate construction in white or black finish.*
- *Corrosion-resistant enclosure with one piece, high-impact resistant, UV stabilized polycarbonate lens and molded gasket with stainless steel screws.*
- *Knockout's provided for conduit feed applications.*
- *EZ snap-out Chevron directional indicators.*

OPTIONS

- *SDT: Self-diagnostic feature performs monthly, biannual, and annual tests to ensure reliable operation and meets electrical and life safety codes.*
- *CW: Optional internal heater and battery blanket for extreme cold temperature applications (-20°C – 50°C).*
- *TP: Tamper-proof hardware helps discourage unauthorized access to the unit.*
- *NH: No lamp heads attached to the unit enabling it to be used as a remote capable EXIT sign.*

WARRANTY / LISTING

- *Five year warranty on all electronics and housing. Batteries prorated for two (lead acid) / five (NiCd) years.*
- *Meets UL924, NFPA101 Life Safety Code, NEC, OSHA, Local and State Codes.*
- *IP66 rated for Ingress protection.*
- *NEMA4X rated.*
- *UL certified for use in food service operations.*
- *UL listed for wet locations (0°C – 50°C on 12W / 15W and 10°C - 40°C on 28W models).*

DIMENSIONS

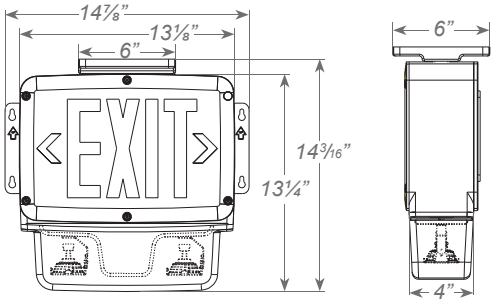

ORDERING INFORMATION

Sample Part Number: **CNXEMU1R615B**

MODEL	No. of FACES		LETTER COLOR		VOLTAGE		WATTAGE		HOUSING COLOR		OPTIONS	
CNXEMU	*1*	*Single*[1]	*R*	*Red*	*6*	*6 volts*	*12*	*12 watts*	*W*	*White*	*SDT*	*Self-Diagnostics*
	2	*Double*[2]	*G*	*Green*	*12*	*12 volts*	*15*	*15 watts*	*B*	*Black*	*CW*	*Cold Weather*[3]
Best # INDCWLEZU							*28*	*28 watts*			*TP*	*Tamper-Proof*
											NH	*No Heads*

[1] *Available only in 15W & 28W models.*
[2] *Available only in 12W models.*
[3] *Available only in 12W & 15W models.*

(817) 468-3591 info@aelnow.com www.aelnow.com

Specifications subject to change without notice.