Advantage Environmental Lighting

CAEMR17

Chicago Approved Steel Recessed Emergency Unit

STANDARD

ILLUMINATION

- *Two, 6V/12V 12W adjustable bi-pin halogen lamp heads.*
- *Long lasting, efficient, wedge base incandescent or bi-pinhalogen lamps.*
- *High performance chrome-plated metallized reflector and glass lens for optimal light distribution.*
- *Adjustable 6V or 12V lamp heads provide optimal center-to-center spacing.*

ELECTRICAL

- *Dual 120V/277 voltage.*
- *Charge rate/power "ON" LED indicator light and push-to-test switch for mandated code compliance testing.*
- *LVD (low voltage disconnect) prevents battery from deep discharge.*
- *6V sealed lead acid, maintenance-free, rechargeable battery.*
- *Internal solid-state transfer switch automatically connects the internal battery to lamp heads for minimum 120-minute emergency illumination.*
- *Fully automatic solid-state, two rate charger initiates battery charging to recharge a discharged battery in 24 hours.*
- *Remote capacity of 26W standard on 50W models.*

MOUNTING

- *Conveniently designed for use with T-bar grid ceilings.*
- *Holes provided on enclosure for wire-suspension mount.*

HOUSING

- *Durable 20-gauge steel construction.*
- *White or black finish.*

WARRANTY / LISTING

- *Five year warranty on all electronics and housing. Battery pro rated for two years.*
- *UL Listed for damp locations (20°C – 50°C).*
- *Meets UL924, NFPA 101 Life Safety Code, NEC, OSHA, Local and State Codes.*
- *Meets city of Chicago requirements.*

DIMENSIONS

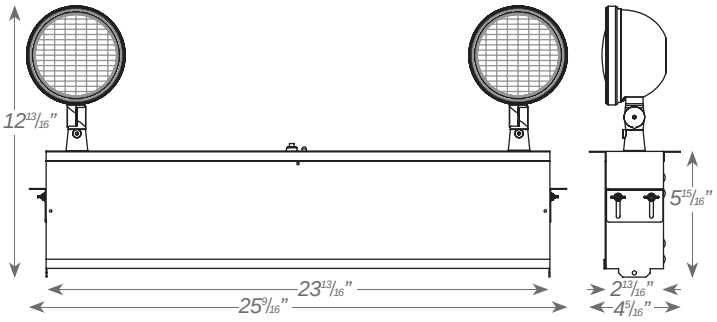

ORDERING INFORMATION

Sample Part Number: ***CAEMR17-6-27***

MODEL	VOLTAGE		WATTS (for 120 mins.)		HOUSING COLOR	
CAEMR17	*6*	*6V*	*27*	*27*[1]	*Blank*	*White*
Best # CAR			*50*	*50*	*B*	*Black*

Notes:

1. Available in 6V only

T (817) 468-3591 info@aelnow.com www.aelnow.com

Advantage Environmental Lighting

CAEMR17

Chicago Approved Steel Recessed Emergency Unit

ELECTRICAL INFORMATION

CATALOG NUMBER	INPUT WATTS (W)		INPUT AMPS (A)	
	120V	277V	120V	277V
CAEMR17-627	11.0	11.0	0.11	0.04
CAEMR17-650	18.0	18.0	0.17	0.07
CAEMR17-1250	26.0	26.0	0.25	0.10