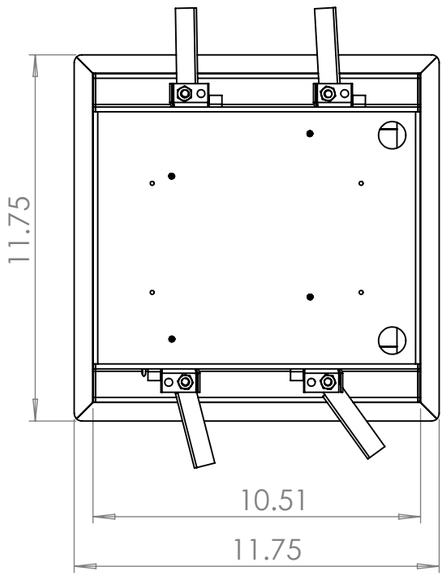

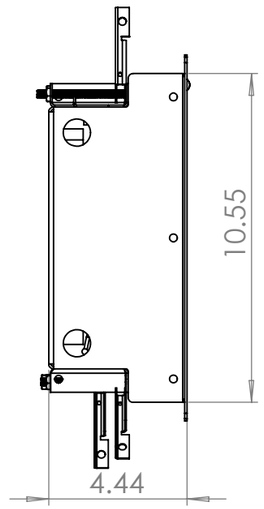

ROUGH IN SIZE 10 13/16" X 10 3/4"

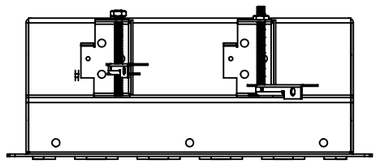

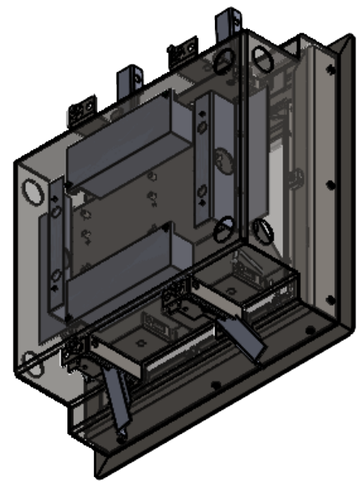

UNLESS OTHERWISE SPECIFIED: DIMENSIONS ARE IN MILLIMETERS SURFACE FINISH: TOLERANCES: LINEAR: ANGULAR:	FINISH: **WHITE**				DEBURR AND BREAK SHARP EDGES	ADVANTAGE ENVIRONMENTAL LIGHTING
	NAME	SIGNATURE	DATE			TITLE: **BCM 1X1 ROUGH IN**
DRAWN			**04/20/23**			
CHK'D						
APPV'D						
MFG				REVISION		
Q.A				MATERIAL: **TBD**		DWG NO. **BCM 1X1** A3
				WEIGHT:		SCALE:1:5 SHEET 1 OF 1