Advantage Environmental Lighting

BASTILLE PRISON GRADE

BASPK

LED Correctional Surface Mount
For Integrated Speaker

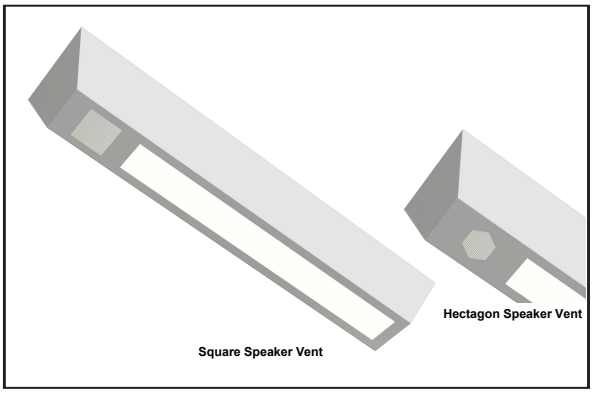

STANDARD	OPTIONAL
UL, Proudly Made in USA	LUTRON

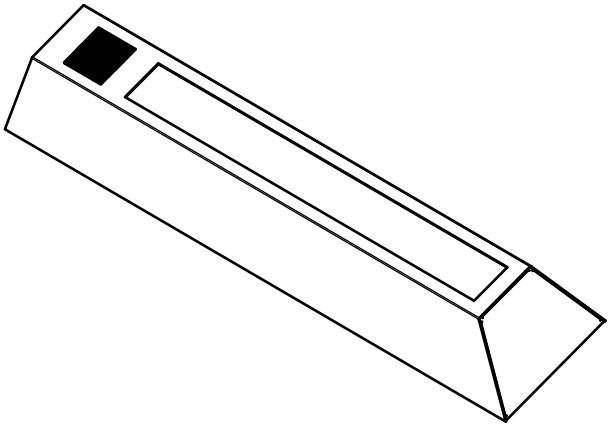

SPECIFICATIONS

DESCRIPTION

The BASPK LED combines maximum security construction with the ability to add an integrated speaker. A one-piece clamshell housing with impact resistant security lensing and tamper resistant fasteners prevent contraband concealment and unwanted fixture penetration. Designed for confinement/security applications, and suitable for maximum security facilities. Applications include inmate cells, secure corridors, general population areas, and more.

FASTENERS

Stainless steel tamper-resistant T20 TORX screws standard. Allen-head screws with center reject pin optional.

ELECTRICAL SYSTEM

0-10V 1% dimming driver included standard. Long-life LED system rated for >100K life hours (L70 @ 25°C). Complies with federal energy efficiency standards.

OPTICAL SYSTEM

Various choices of inner and outer lenses. If additional lens options are required, consult factory. Prismatic inner lens and clear polycarbonate outer lens are recommended.

LISTINGS

UL listed for damp locations. Manufactured in the USA, BAA Compliant.

FINISH

Electro-statically applied white powder coat exterior finish. High gloss white internal paint with a minimum reflectance of 92%. Anti-microbial paint optional.

HOUSING

Various housing material options, consult factory if additional options not listed are needed. 14 Gauge backplate standard. Clamshell design with continuous welded and ground ends to form a one-piece, seamless, doorless housing which maximizes impact resistance and prevents contraband concealment, as well as unauthorized fixture penetration. Two stainless-steel aircraft cables attach housing to back plate.

LED

80 CRI or 90 CRI LEDs available in 2700K, 3000K, 3500K, 4000K and 5000K. Life is >100,000 hours at 70% lumen maintenance.

BACKPLATE

Die-formed 14 ga. steel backplate forms an irretrievable blade trap to prevent contraband concealment.

WARRANTY

5 - Year Limited Warranty. Complete warranty and terms located at: www.aelnow.com/warranty

PART#	DELIVERED LUMENS	WATTS	L70 @20C (HRS)
4.5L	4500 LUMENS	XX	>100K
8L	8000 LUMENS	XX	>100K
11L	11,000 LUMENS	XX	>100K
12L	12,000 LUMENS	X	>100K
13L	13,000 LUMENS	XX	>100K
16L	16,000 LUMENS	X	>100K

Approximate Color Temperature Multiplier	
5000K	1.03
4000K	1
3500K	0.97
3000K	0.94
2700K	0.91

Advantage. Environmental Lighting

CATALOG NUMBER
PROJECT
TYPE

ORDERING INFORMATION

Example: BASPK4-40-ML-HXN-4-PA125-250P-B14-M
Custom Lumen Output Example: BASPK4-40-11L-HXN-4-PA125-250P-B14-M-7000 for 7000 lumens

SERIES	CCT	ILLUMINATION LEVEL	SPEAKER VENT	SPEAKER SIZE*	INNER LENS	OUTER LENS
BASPK4 4'	**27** 2700K **30** 3000K **35** 3500K **40** 4000K **50** 5000K	4.5L 4500 Lumens 8L 8000 Lumens 11L 11,000 Lumens 12L 12,000 Lumens 13L 13,000 Lumens 16L 16,000 Lumens	**SQ** Square **RD** Round **HXN** Hexagon	**4** 4" Diameter	**PA125** .125 Prismatic Acrylic **PA156** .156 Prismatic Acrylic **PP125** .125 Prismatic Polycarbonate **PP156** .156 Prismatic Polycarbonate **PP187** .187 Prismatic Polycarbonate	**125P** .125 Clear Polycarbonate **156P** .156 Clear Polycarbonate **187P** .187 Clear Polycarbonate **250P** .250 Clear Polycarbonate **375P** .375 Clear Polycarbonate

* Consult with factory to ensure your speaker will fit this enclosure.
*Speaker not included with fixture.

HOUSING	DRIVER	VOLTAGE	OPTIONS
B14 14 Gauge Cold Roll Steel **B16** 16 Gauge Cold Roll Steel **SH14** 14 Gauge Stainless Steel **SH16** 16 Gauge Stainless Steel	**BLANK** 0-10V 1% Dimming Driver (included standard) **CD5** 0-10V 5% to off Dimming Driver **EDN** Electronic Driver Non-Dimming **FLDD** Fifth Light Dali, Dimming **LDE1** Lutron Hi-lume 1% EcoSystem LED driver with Soft-on, Fade-to-Black dimming technology **LDE5** Lutron LDE5 5-Series Ecosystem 5% Dimming	**M** 120/277V	**14EBL** 14W Emergency Backup **AM** Anti-Microbial White Paint **BR** Brushed (Stainless Steel Only) **AH** Allen Head Screws With Center Pin Reject **90** 90 **LN** Night Light (XX - Specify CCT) **NLXX** (30=3000K, 35=3500K,40=4000K)
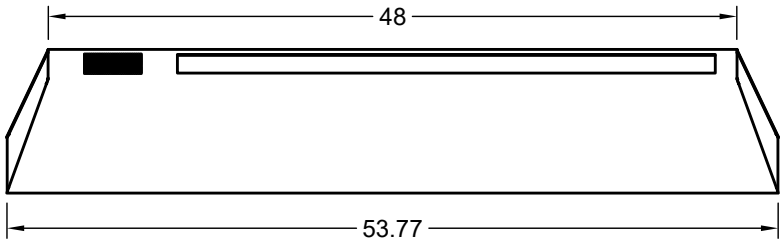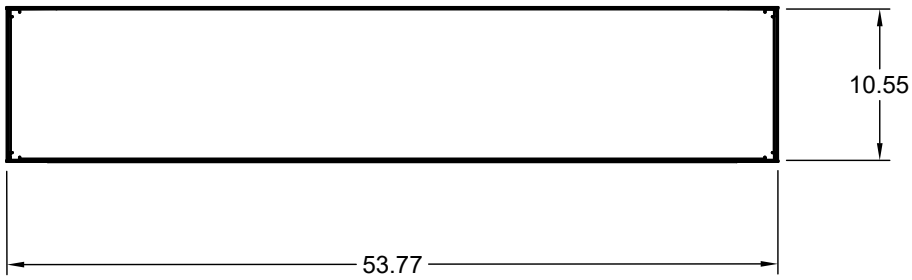
DIMENSIONS