ADVANTAGE ENVIRONMENTAL LIGHTING

CATALOG #:

PROJECT:

TYPE:

BAF SURFACE MOUNT LED PRISON GRADE

MADE IN THE USA

- **BULLET POINT**
- **BULLET POINT**
- **BULLET POINT**
- **BULLET POINT**

DESCRIPTION

The BAF combines maximum security construction features with energy saving technology. UL listed for damp locations; optional wet location under covered ceiling. This surface mounted luminaire utilizes a one-piece housing, security lensing and tamper-resistant fasteners to maximize impact resistance and prevent contraband concealment and unauthorized fixture penetration. The BAF is ideal for confinement/security applications. Suitable for use in inmate cells, psychiatric wards, secure corridors and general population areas.

FASTENERS: Stainless steel tamper-resistant T20 TORX screws are standard. Allen-head screws with center reject pin are optional.

ELECTRICAL SYSTEM: Electronic driver 0-10V 1% dimming standard. Long-life LED system rated for >100K hours (L70 @ 25°C). Complies with federal energy efficiency standards.

OPTICAL SYSTEM: Choice of prismatic acrylic, prismatic polycarbonate or prismatic tempered glass on fixture side, clear polycarbonate or clear tempered glass on environmental side. Lens secured by thru-studs and vertically adjustable internal CRS holddowns.

LISTINGS: UL listed for damp locations. Wet location option available.

FINISH: High gloss, electrostatically applied, white powder coat finish, average minimum reflectance 92%

HOUSING: Die-formed body in various material options with continuous welded and ground ends to form a one piece, seamless housing for maximum impact resistance and prevention of unauthorized fixture penetration.

LED: 80 CRI or 90 CRI LEDs available in 2700K, 3000K, 3500K, 4000K and 5000K. LED Life is >100,000 hours at 70% lumen maintenance.

DOOR: One-piece door frame with die-formed edges and tightly closed corners increases rigidity. Door gauge to match housing. Door is attached to the housing with stainless steel aircraft cables. Piano Hinge option available.

DOORFRAME GASKET: One-piece closed cell silicone gasket seals doorframe to housing for wet location option.

WARRANTY: 5 - Year Limited Warranty. Complete warranty and terms located at: **www.aelnow.com/warranty**

LED SLOT LOW PROFILE LINEAR RECESSED

Example: XXXX.XXXX-XXX-XXXXX-XXXXX-XXXXXX

FIXTURE	MOUNTING		CCT		OUTPUT		VOLTAGE		FINISH		LENGTH	
BAF1x2	L	Lay-in Grid	27	2700K	5L	500 Lm/Ft7	M	Multi-Volt (120-277V)	W	Matte White	2	2 ft
BAF1X4	F	Flanged	30	3000K	L	700 Lm/Ft			SP	Special Finish	5	5 ft
	FT	Flangeless Trim	35	3500K	10L	1000 Lm/Ft					4	4 ft
	FR	Flangeless Retrofit	40	4000K	14L	1400 Lm/Ft					6	6 ft
			50	5000K	XXXXL	XXXX Lm/Ft					8	8 ft
											7	7 ft
											XX	XX ft

For special runs, such as wall-to-ceiling, 90 degree or custom angle turns, add desired length after the option. eg: XLSLPR-FT-40-10L-M-W-14-90D-13 for 14 foot to 90 degree turn to 13 foot.

ADVANTAGE ENVIRONMENTAL LIGHTING

CATALOG #:

PROJECT:

TYPE:

00000 THREE LINES THREE LINES THREE LINES

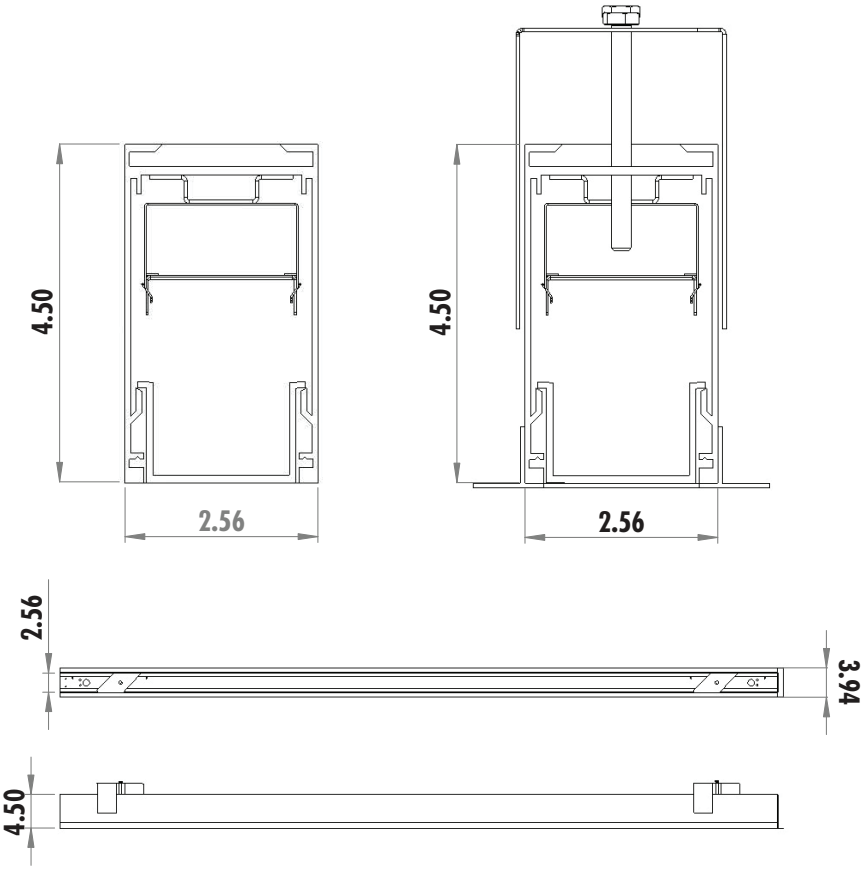

LED INFORMATION

OUTPUT	5L	7L	10L	14L
LUMENS/FT*	500	700	1000	1400
SYSTEM WATTAGE/FT	3.125W	4.375W	6.25W	8.75W
EFFICACY (LM/W)	160	160	160	160
CRI >82 >82 >82 >82				
DIMMING	0-10V	0-10V	0-10V	0-10V
COLOR CONSISTENCY	>3 SDCM	>3 SDCM	>3 SDCM	>3 SDCM
RATED LIFE (L70)	>100,000 HRS	>100,000 HRS	>100,000 HRS	>100,000 HRS

** Lumen output was calculated with 4000K LEDs.*

LUMEN ADJUSTMENT FACTORS 80 CRI

CCT	2700K	3000K	3500K	4000K	5000K
ADJUSTMENT	93.5%	95.2%	96.8%	100.0%	103.0%

LUMEN ADJUSTMENT FACTORS 90 CRI

CCT	2700K	3000K	3500K	4000K	5000K
ADJUSTMENT	77.5%	79.2%	80.8%	85.1%	87.3%

LIGHT TRAP PREVENTS LIGHT LEAKS

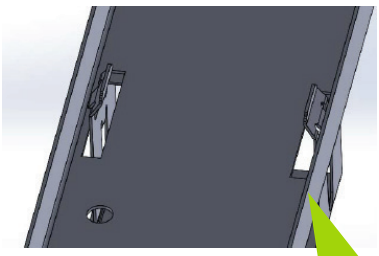

BOARD TRAY QUICK-RELEASE HOLDERS

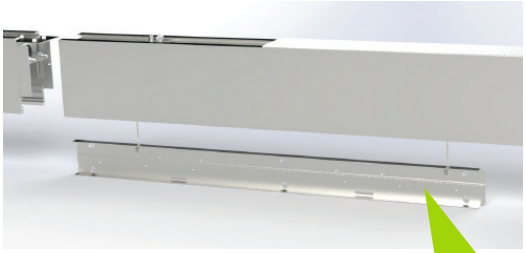

BOARD TRAY CONNECTED WITH TETHERS