ADVANTAGE ENVIRONMENTAL LIGHTING

MADE IN THE USA

CATALOG #:

PROJECT:

TYPE:

BABR RECESSED PRISON GRADE EXIT SIGN WITH ROUNDED DOOR FACING

BASTILLE PRISON GRADE

The **BABR** is a recessed prison grade LED exit sign. Perfect for any application that requires a heavy duty, vandal resistant exit sign. This exit sign varies from our popular BAB exit sign with a rounded inside door facing.

ELECTRICAL: 624 nm Red or 527 nm Green LED light source. Electrical components mounted to removable high impact, injection molded polycarbonate chassis.

LISTINGS: ETL listed for Wet Location. UL Classified IP65 per IEC 60598. Meets or exceeds UL924 and NFPA 101 Standards. Meets or exceeds CSA and NRCAN requirements.

MOUNTING: Torx T25 fasteners are standard, allen head with center pin reject is optional.

HOUSING: One-piece die-formed prime 14-gauge grade material as standard (available in gauges from 12 to 18). Corners continuously seam welded and smooth with no post grinding (TIG).

DOOR: One-piece die-formed prime grade 14-gauge as standard. Corners continuously seam welded and smooth with no post grinding (TIG).

FINISH: TGIC polyester powder coat – 5-stage pre-treatment. Salt spray test: 1,000 hours. See Options for black exterior.

OPTIONS: Sealed Emergency Battery Pack with standard deep cycle battery conditioning, self test and self diagnostic circuitry available. Provides 90 minutes of emergency operation with standard emergency backup option. Also available as wet location (IP65).

WARRANTY: 5-Year Limited Warranty. Complete warranty and terms located at: **www.aelnow.com/warranty.**

ORDERING INFORMATION:
EXAMPLE: BABR-1-B14-G-W-M-TH

SERIES	HOUSING / DOOR MATERIAL		LEGEND COLOR		VOLTAGE		OPTIONS	
BABR	B12	Cold Roll 12 Gauge Steel (Painted)	G	Green	M	120/277VAC	BLANK	AC Only
	B14	Cold Roll 14 Gauge Steel (Painted)	R	Red			EM	90 Minute Standard Emergency Backup
	B16	Cold Roll 16 Gauge Steel (Painted)					BLK	Black Exterior (N/A with brushed housing/ door material)
	B18	Cold Roll 18 Gauge Steel (Painted)					SDT	Self Diagnostic
	SH14	Stainless Steel 14 Gauge (Painted)					WL	Wet Location (IP65)*
	SH14B	Stainless Steel 14 Gauge (Brushed)					AH	Allenhead w/ Center Pin Fasteners
	SH16	Stainless Steel 16 Gauge (Painted)						
	SH16B	Stainless Steel 16 Gauge (Brushed)						
	SH18	Stainless Steel 18 Gauge (Painted)						
	SH18B	Stainless Steel 18 Gauge (Brushed)						

*From door to housing only, recessed body is damp location only.

Consult factory for any gauge not listed.

Dimensions on Next Page

ADVANTAGE ENVIRONMENTAL LIGHTING

CATALOG #:

PROJECT:
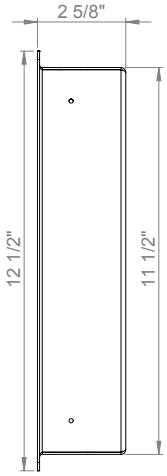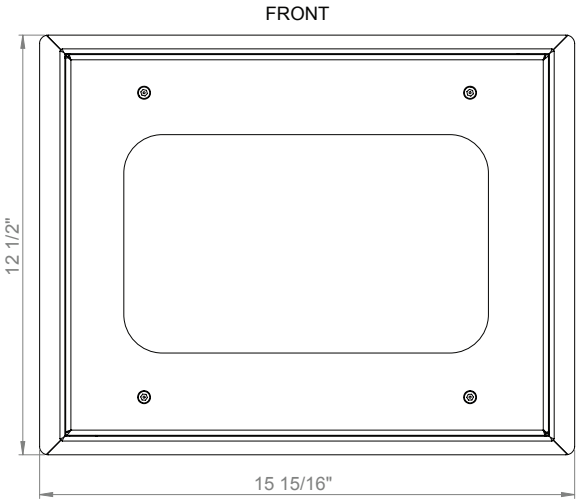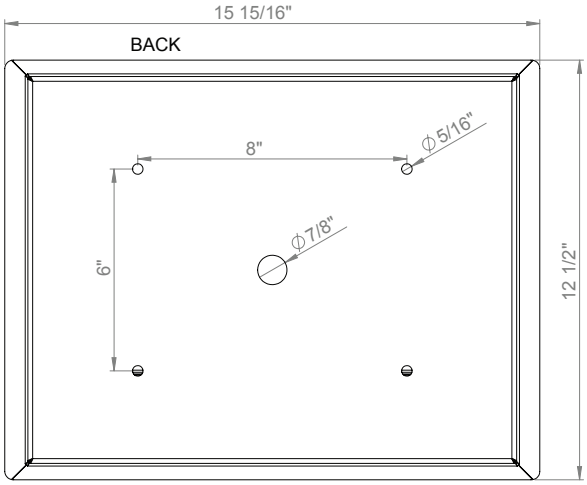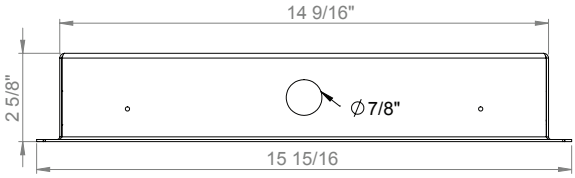
TYPE: