ADVANTAGE ENVIRONMENTAL LIGHTING

MADE IN THE USA

CATALOG #:

PROJECT:

TYPE:

BAB PRISON GRADE LED EXIT SIGN

- STRONG POLYCARBONATE CHASSIS
- SECURITY HARDWARE
- VANDAL RESISTANT

BASTILLE PRISON GRADE

STANDARD

UL WET location IP65 NFPA 101

DESCRIPTION

The BAB is a prison grade LED exit sign. Perfect for any application that requires a heavy duty, vandal resistant exit sign.

ELECTRICAL: 624 nm Red or 527 nm Green LED light source. Electrical components mounted to removable high impact, injection molded polycarbonate chassis.

LISTINGS: UL and CUL listed for Wet Location. UL Classified IP65 per IEC 60598. Meets or exceeds UL924 and NFPA 101 Standards. Meets or exceeds CSA and NRCAN requirements.

MOUNTING: Hardened security screws as specified – see ordering information.

HOUSING: One-piece die-formed prime 14-gauge grade material as specified – see ordering information. Corners continuously seam welded and smooth with no post grinding (TIG).

DOOR: One-piece die-formed prime grade 14-gauge. Corners continuously seam welded and smooth with no post grinding (TIG).

FINISH: TGIC polyester powder coat – 5-stage pre-treatment. Salt spray test: 1,000 hours; Reflectance: 92%. See Options for black exterior.

OPTIONS: Sealed Emergency Battery Pack with standard deep cycle battery conditioning, self test and self diagnostic circuitry available. Provides 120 minutes of emergency operation with standard emergency backup option.

WARRANTY: 5 - Year Limited Warranty. Complete warranty and terms located at: **www.aelnow.com/warranty.**

ORDERING INFORMATION:
EXAMPLE: BAB-1-B14-G-W-M-TH

SERIES	FACE		HOUSING / DOOR MATERIAL		LEGEND COLOR		MOUNTING TYPE		VOLTAGE		FASTENER		OPTIONS	
BAB	1	Single Face	B14	Cold Roll 14 Gauge Steel (Painted)	G	Green	W	Wall Mount	M	120/277VAC	TH	Torx Head w/ Center Pin	BLANK	AC Only
	2	Double Face	SH14	Stainless Steel 14 Gauge (Painted)	R	Red	T	Top Mount			AH	Allen Head w/ Center Pin	EM	Standard Emergency Backup
			SH14B	Stainless Steel 14 Gauge (Brushed)			S	Side Mount					BLK	Black Exterior (N/A with brushed housing/ door material)
													TS	Torx Screwdriver
													SDT	Self Diagnostic

ADVANTAGE ENVIRONMENTAL LIGHTING

CATALOG #:	
PROJECT:	
TYPE:	

BAB PRISON GRADE LED EXIT SIGN

Single Face

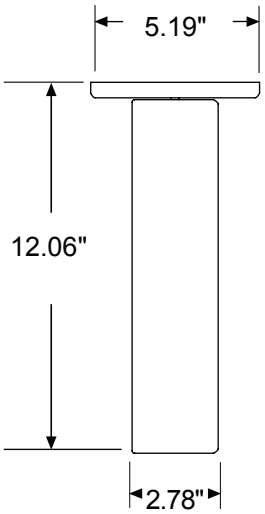

Double Face

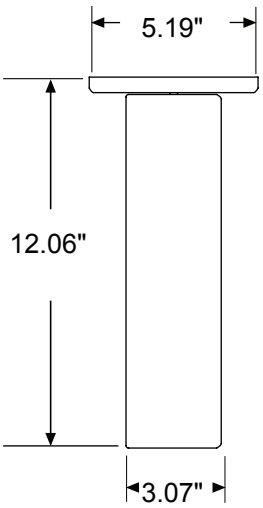

Top Mount

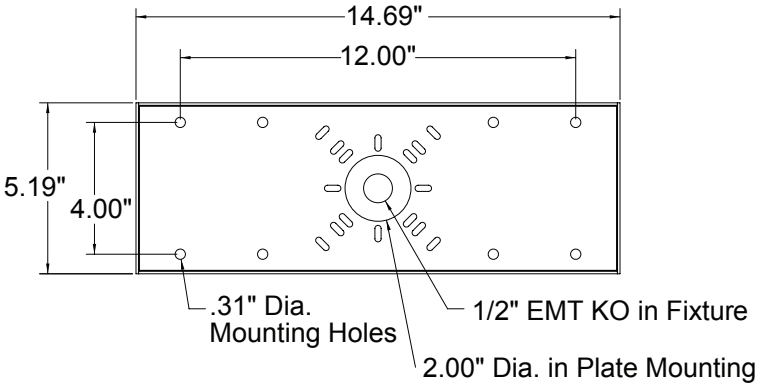

Wall Mount (Single Face Only)

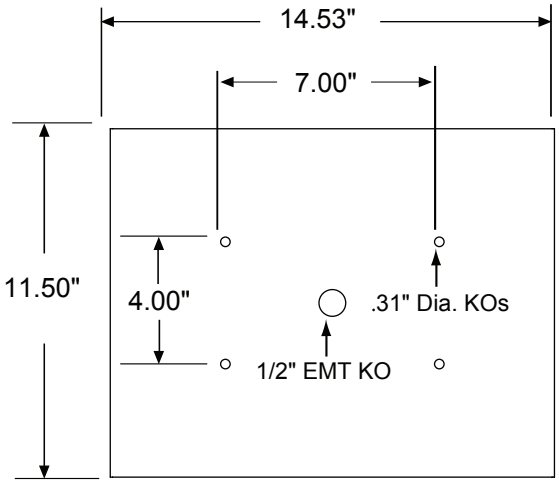
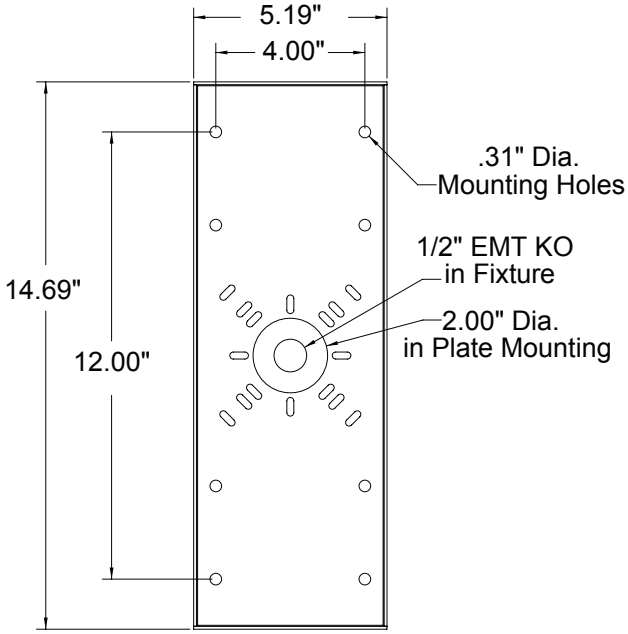
Side Mount