ADVANTAGE ENVIRONMENTAL LIGHTING

MADE IN THE USA

CATALOG #:

PROJECT:

TYPE:

BAA RECESSED LED PRISON GRADE

BASTILLE PRISON GRADE

Anti-Ligature

The **BAA** is a specification grade maximum security recessed luminaire. Designed and engineered for maximum security prison applications, the BAA is available in 1x1, 1x2, 1x4, 2x2, and 2x4 sizes. Our custom designed fixture is also anti-ligature.

HOUSING: Die formed, seam welded, and ground smooth (specify material and gauge). Incorporates a removable reflector unitized with all electrical components for easy installation and maintenance. Die formed one-piece frame with tightly closed corners. (material and gauge to match housing).

DOORFRAME: Various doorframe materials available. Comes standard with a white TGIC polyester powder coat – 5-stage pre-treatment. Salt spray test: 1,000 hours; Reflectance: 92%. Doorframe secured to housing with stainless steel aircraft cables and tamper proof fasteners. Anti-ligature is standard with inset doors, but not avilable on overlap doors.

TAMPER-PROOF FASTENERS: Tamper resistant T25 Torx head fasteners secure the doorframe to the housing. Allenhead screws with center pin reject can be chosen as an option.

ELECTRICAL SYSTEM: Electronic driver 0-10V, 1% dimming standard. Additional driver options available. Long-life LED system rated for >100K hours (L70 @ 45°C). Complies with federal energy efficiency standards.

OPTICAL SYSTEM: Inner lens for LED diffusion, and outer lens for impact resistance. Lenses ordered per specification (see options) and secured by retainers with weld studs for maximum strength.

LISTINGS: IP65 with Wet Location Option. NSF = NSF2 listed (Non-Food, Splash Zone). UL listed for damp location. Anti-ligature design.

MOUNTING: Recessed grid and recessed flanged applications. Easy installation with adjustable 90° swing arm system standard. Universal mounting allows for both recessed flanged and recessed grid mounting.

LED: 80 CRI or 90 CRI LEDs available in 2700K, 3000K, 3500K, 4000K and 5000K. Life is >100,000 hours at 70% lumen maintenance.

WARRANTY: 5-Year Limited Warranty. Complete warranty and terms located at: **www.aelnow.com/warranty**

Ordering Information on Next Page

ADVANTAGE ENVIRONMENTAL LIGHTING

CATALOG #:

PROJECT:

TYPE:

ORDERING INFORMATION:
Example: BAA-22-35-HL--B14-B14-375P-PA125-M

SERIES

BAA

SIZE

11	1x1
12	1x2
14	1x4
22	2x2
24	2x4

CCT

27	2700K
30	3000K
35	3500K
40	4000K
50	5000K

OUTPUT

2X4 2X2 1X4 1X2 1X1

4L	4000 Lumens (Standard Low)
7L	7000 Lumens (Medium Low)
11L	11000 Lumens (High Low)
12L	12000 Lumens (Standard Medium)
13L	13000 Lumens (Medium Medium)
15L	15000 Lumens (High Medium)
17L	17000 Lumens (High)
20L	20000 Lumens (Medium High)
25L	25000 Lumens (High High)
XX	Custom Lumens

HOUSING MATERIAL

B12	12 Gauge Cold Roll Steel
B14	14 Gauge Cold Roll Steel
B16	16 Gauge Cold Roll Steel
B18	18 Gauge Cold Roll Steel
B20	20 Gauge Cold Roll Steel
SH14	14 Gauge Stainless Steel
SH16	16 Gauge Stainless Steel
SH18	18 Gauge Stainless Steel

DOOR TYPE

B14	14 Gauge Cold Roll Steel
B16	16 Gauge Cold Roll Steel
B18	18 Gauge Cold Roll Steel
B20	20 Gauge Cold Roll Steel
SH14	14 Gauge Stainless Steel
SH16	16 Gauge Stainless Steel
SH18	18 Gauge Stainless Steel

DOOR TYPE

INS	Inset Door
OVL	Overlap Door

**Anti-Ligatiure only available with Inset Door*

INNER LENS

N	No Lens
PA125	.125 Prismatic Acrylic (inverted)
PA156	.156 Prismatic Acrylic (inverted)
PP125	.125 Prismatic Polycarbonate (inverted)
PP187	.187 Prismatic Polycarbonate (inverted)
CTG/PA	Clear Tempered Glass with Prismatic Acrylic Overlay
FA	Frosted Acrylic
125P	.125 Clear Polycarbonate
156P	.156 Clear Polycarbonate
187P	.187 Clear Polycarbonate
SY	Symmetric Diffused DR Acrylic

OUTER LENS

125P	.125 Clear Polycarbonate
156P	.156 Clear Polycarbonate
187P	.187 Clear Polycarbonate
250P	.250 Clear Polycarbonate
375P	.375 Clear Polycarbonate
CTG187	.187 Clear Tempered Glass
CTG250	.250 Clear Tempered Glass
CTG375	.375 Clear Tempered Glass
CTG500	.500 Clear Tempered Glass

VOLTAGE

M	120/277V
HV	347-480VAC

DRIVER

BLANK	0-10V 1% Dimming Driver (included standard)
CD5	0-10V 5% to Off Dimming Driver
EDN	Electronic Driver Non-Dimming
DALI	1% Dimming Driver
LDE1	Lutron Hi-lume 1% EcoSystem LED driver with Soft-on, Fade-to-Black dimming technology

OPTIONS

14EBL	14 Watt Emergency Ballast
AH	Allenhead Screws with center pin reject
LN	LED Night Light (Consult factory for available CCT)
FZ	Fuse Holder
WL	Wet Location
UV	.005 UV Absorbing Overlay
90	90 CRI
AM	Antimicrobial White Paint
IS	Internal Occupancy Sensor (Microwave)
IPH	Full Length Internal Piano Hinge Door Frame

Other options and configurations are available. Consult factory for details.

Dimensions on Next Page

ENERGY AND PERFORMANCE DATA

INPUT VOLTAGE:	120/277VAC
SYSTEM INPUT POWER:	27.8 - 173.4 WATTS*
DELIVERED LUMEN OUTPUT:	4000 - 25000 LUMENS
STANDARD DIMMING CONTROL:	0-10V
CCT:	2700, 3000, 3500, 4000, 5000 KELVIN
CRI:	82 (MINIMUM)
LIFE TIME RATING:	>100,000 HRS @ L70
INPUT FREQUENCY:	50/60 HZ
POWER FACTOR:	>0.9
OPERATING TEMP:	-30° TO 50° C

*ACTUAL WATTAGE MAY DIFFER BY ±5% WHILE OPERATING 120/277V ±10%

APPROXIMATE COLOR TEMPERATURE MULTIPLIER

5000K	X	1.03
4000K	X	1
3500K	X	.97
3000K	X	.94
2700K	X	.91

PART#	DELIVERED LUMENS	WATTS	L70 @20C (HRS)
4L	4000 LUMENS	27.8	>100K
7L	7000 LUMENS	48.5	>100K
11L	11000 LUMENS	79.3	>100K
12L	12000 LUMENS	83.2	>100K
13L	13000 LUMENS	90.1	>100K
15L	15000 LUMENS	104	>100K
16L	16000 LUMENS	110.1	>100K
20L	20000 LUMENS	138.7	>100K
25L	25000 LUMENS	173.4	>100K

ADVANTAGE ENVIRONMENTAL LIGHTING

CATALOG #:	
PROJECT:	
TYPE:	

Cut Out Size to be 25 5/8"

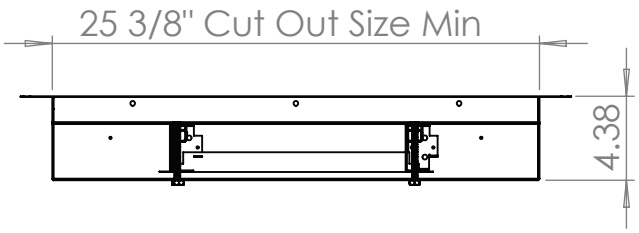

Cut Out Size to be 24 5/8"

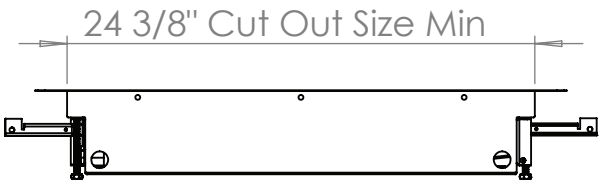

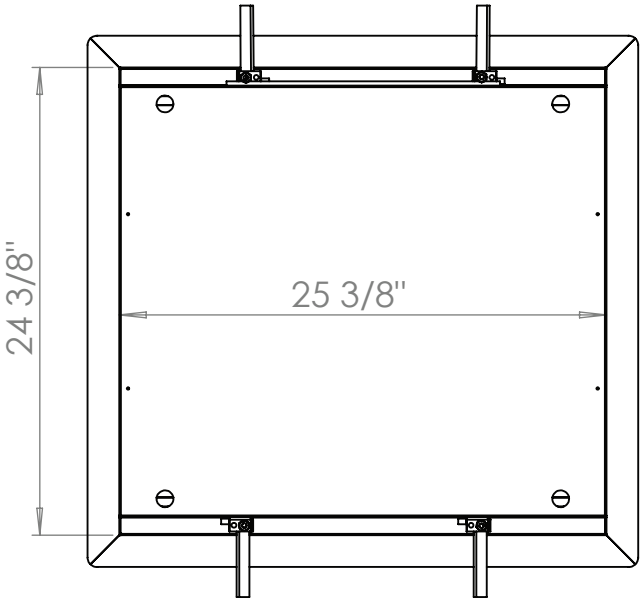

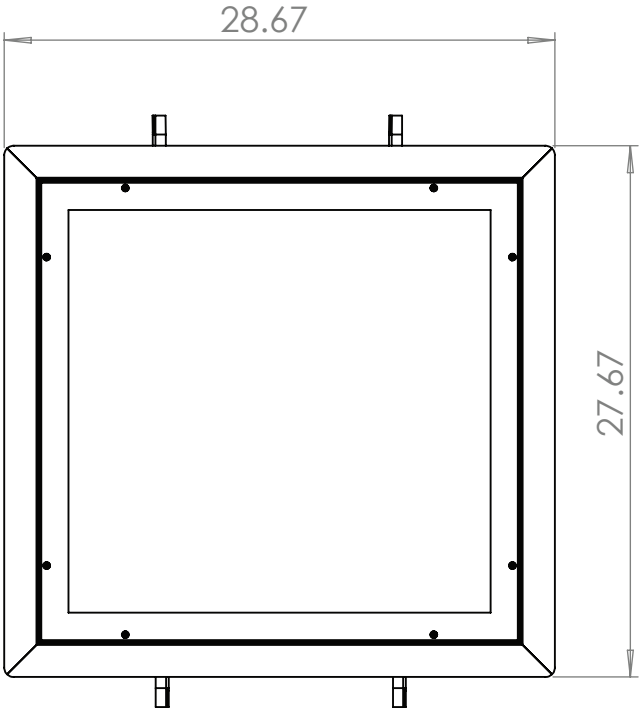

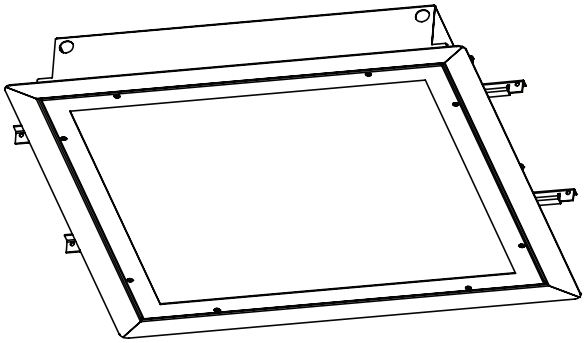

ADVANTAGE ENVIRONMENTAL LIGHTING

CATALOG #:

PROJECT:
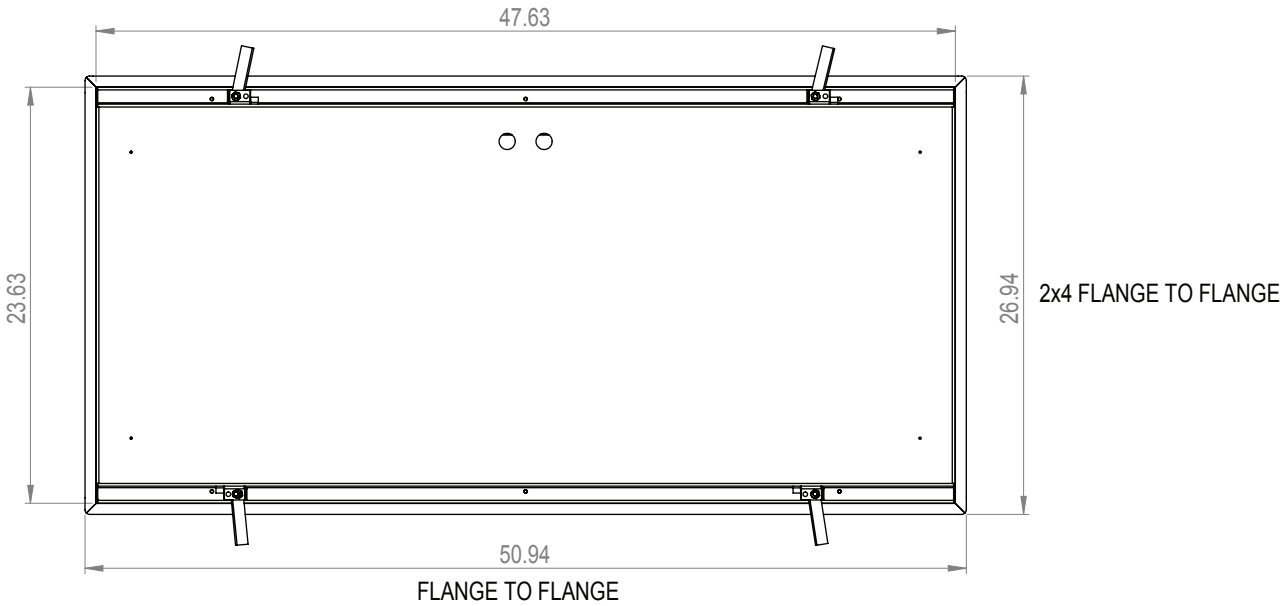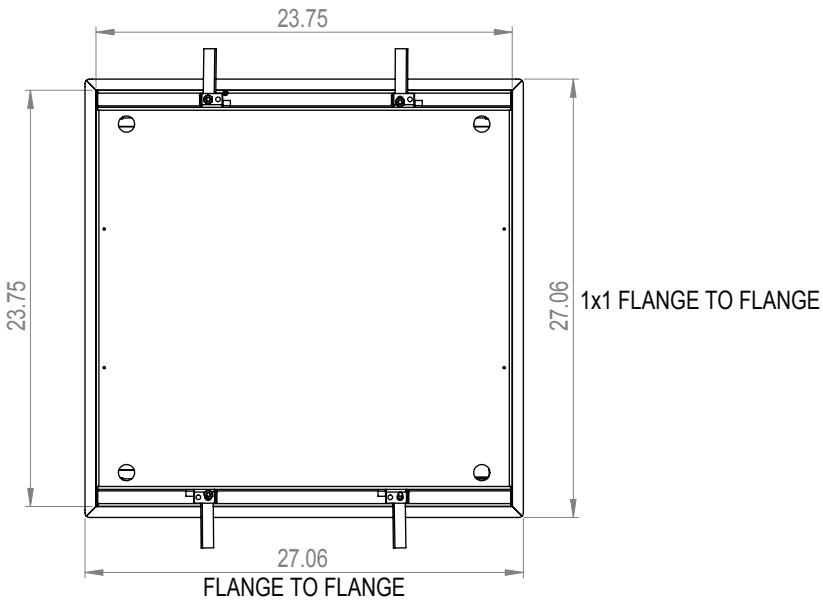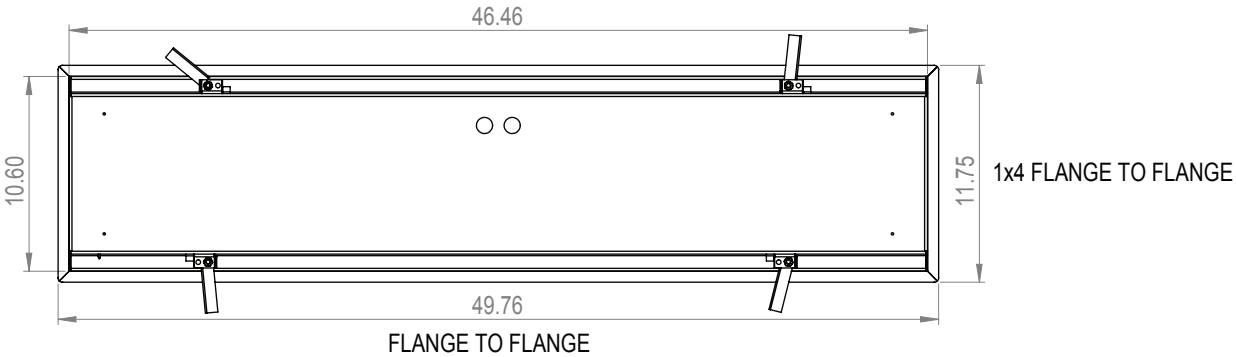
TYPE: