Advantage. Environmental Lighting

BASTILLE PRISON GRADE

BAAF Recessed Flanged LED Prison Grade

STANDARD | OPTIONAL

DESCRIPTION

The BAAF is a specification grade maximum security recessed flanged luminaire. Designed and engineered for maximum security prison applications, the BAAF is available in 1x1, 1x2, 1x4, 2x2, and 2x4 sizes.

HOUSING

Die formed, seam welded, and ground smooth (specify material and gauge). Incorporates a removable reflector unitized with all electrical components for easy installation and maintenance. Die formed one-piece frame with tightly closed corners. (material and gauge to match housing).

DOORFRAME

Various doorframe materials available, available as Inset or Overlapping doorframe. Comes standard with a white TGIC polyester powder coat – 5-stage pre-treatment. Salt spray test: 1,000 hours; Reflectance: 92%. Doorframe secured to housing with stainless steel aircraft cables and tamper proof fasteners.

TAMPER-PROOF FASTENERS

Tamper resistant Torx head fasteners secure the doorframe to the housing. Allenhead screws with center pin reject option.

ELECTRICAL SYSTEM

Electronic driver 0-10V 1% dimming standard. Long-life LED system rated for >100K hours (L70 @ 25°C). Complies with federal energy efficiency standards.

OPTICAL SYSTEM

Lens per specification (see options) and secured by "Z" retainers with weld studs spaced six inches apart for maximum strength.

LISTINGS

IP65 with Wet Location Option. NSF = NSF2 listed (Non-Food, Splash Zone). UL listed for damp location. Anti-ligature design.

MOUNTING

Easy installation with adjustable 90° swing arm system standard for recessed flanged applications. Universal mounting for both flange and lay-in grid applications.

LED

80 CRI or 90 CRI LEDs available in 2700K, 3000K, 3500K, 4000K and 5000K. Life is >100,000 hours at 70% lumen maintenance.

WARRANTY

5 - Year Limited Warranty. Complete warranty and terms located at: www.aelnow.com/warranty

Approximate Color Temperature Multiplier	
5000K	1.03
4000K	1
3500K	0.97
3000K	0.94
2700K	0.91

Output	Delivered Lumens	System Wattage	L70 @20C (hrs)
L	2536	18	>100K
SL	4650	33	>100K
ML	7974	57	>100K
HL	11150	80	>100K
SM	12040	86	>100K
MM	13016	93	>100K
HM	15728	112	>100K
SH	16500	118	>100K
MH	20000	143	>100K
HH	25000	179	>100K

Delivered Lumens shown were tested with 4000K LEDs and ASR (asymmetric/symmetric grid) lens.

***NOTES:**
BAAF11 (1x1) only available up to SL - Standard Low
BAAF12 (1x2) only available up to HL - High Low
BAAF14 (1x4) only available up to HM - High Medium
BAAF22 (2x2) only available up to HM - High Medium

Advantage Environmental Lighting

Catalog Number	
Project	
Type	

Series		CCT		Illumination Level*		Housing	
BAAF11	1x1	**27**	2700K	**L**	Low	**B12**	Cold Roll 12 Gauge Steel
BAAF12	1x2	**30**	3000K	**SL**	Standard Low	**B14**	Cold Roll 14 Gauge Steel
BAAF14	1x4	**35**	3500K	**ML**	Medium Low	**B16**	Cold Roll 16 Gauge Steel
BAAF22	2x2	**40**	4000K	**HL**	High Low	**B18**	Cold Roll 18 Gauge Steel
BAAF24	2x4	**50**	5000K	**SM**	Standard Medium	**B20**	Cold Roll 20 Gauge Steel
				MM	Medium Medium	**SH14**	Stainless Steel 14 Gauge
				HM	High Medium	**SH16**	Stainless Steel 16 Gauge
				SH	Standard High	**SH18**	Stainless Steel 18 Gauge
				MH	Medium High	**ALH**	.063" Aluminum
				HH	High High		

SERIES NO. CONTINUED...

***NOTES:**
BAAF11 (1x1) only available up to SL - Standard Low
BAAF12 (1x2) only available up to HL - High Low
BAAF14 (1x4) only available up to HM - High Medium
BAAF22 (2x2) only available up to HM - High Medium

Door		Door Type		Outer Lens		Inner Lens	
B12	Cold Roll 12 Gauge Steel	**INS**	Inset Doorframe	**125P**	.125 Clear Polycarbonate	**N**	No Lens
B14	Cold Roll 14 Gauge Steel	**OVL**	Overlap Doorframe	**156P**	.156 Clear Polycarbonate	**PA125**	.125 Prismatic Acrylic
B16	Cold Roll 16 Gauge Steel			**187P**	.187 Clear Polycarbonate	**PA156**	.156 Prismatic Acrylic
B18	Cold Roll 18 Gauge Steel			**250P**	.250 Clear Polycarbonate	**PP125**	.125 Prismatic Polycarbonate
SH14	Stainless Steel 14 Gauge			**375P**	.375 Clear Polycarbonate	**PP187**	.187 Prismatic Polycarbonate
SH16	Stainless Steel 16 Gauge			**CTG187**	.187 Clear Tempered Glass	**CTG/PA**	Clear Tempered Glass with Prismatic Acrylic Overlay
SH18	Stainless Steel 18 Gauge			**CTG250**	.250 Clear Tempered Glass	**G2**	.140 DR Acrylic
ALH	.063" Aluminum			**CTG375**	.375 Clear Tempered Glass	**WTP**	White Translucent Polycarbonate
						125P	.125 Clear Polycarbonate
						156P	.156 Clear Polycarbonate
						187P	.187 Clear Polycarbonate
						SY	Symmetric Diffused DR Acrylic

Voltage		Driver		Options	
M	120/277V	**BLANK**	0-10V 1% Dimming Driver (*included standard*)	**12EBL**	1200 Lumen Emergency Ballast
		CD5	0-10V 5% to Off Dimming Driver	**AH**	Allenhead Screws with center pin reject
		EDN	Electronic Driver Non-Dimming	**LN**	LED Night Light (Consult factory for available CCT)
		FLDD	Fifth Light Dali, Dimming	**FZ**	Fuse Holder
		LDE1	Lutron Hi-lume 1% EcoSystem LED driver with Soft-on, Fade-to-Black dimming technology	**WL**	Wet Location
		LDE5	Lutron LDE5 5-Series Ecosystem 5% Dimming	**UV**	.005 UV Absorbing Overlay
				PF	Plaster Frame & Yoke
				CB	Cross Bar
				90	90 CRI
				AM	Antimicrobial White Paint
				VDO	Lutron Vive Integral Fixture Control (RF with Daylight and Occupancy Sensing)
				FCJS0	Lutron Vive Attached Fixture Control (RF Only for 0-10V Drivers)
				IPH*	Internal Piano Hinge

***Internal Piano Hinge not available with Inset Door**

Advantage Environmental Lighting

Catalog Number	
Project	
Type	

DIMENSIONS

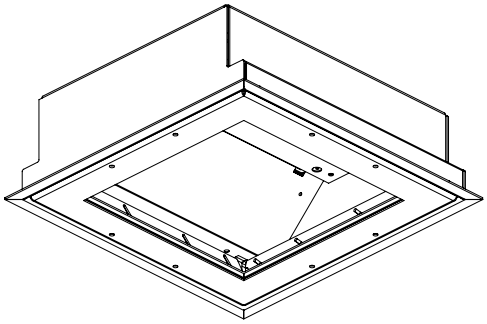

1x2

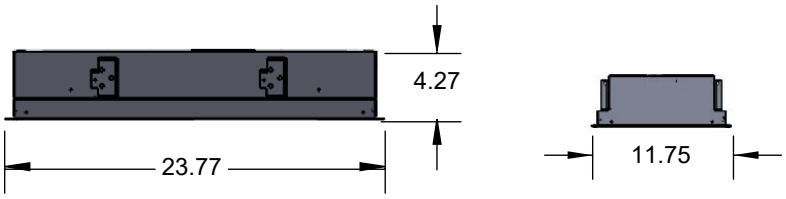

1x1

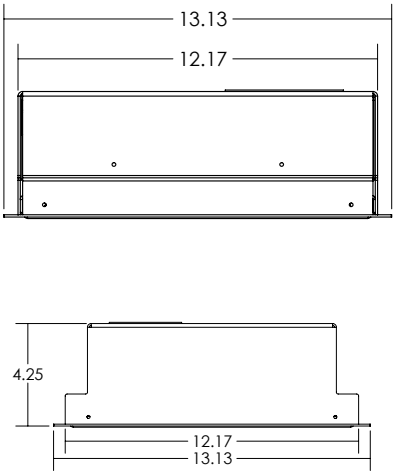

2x4

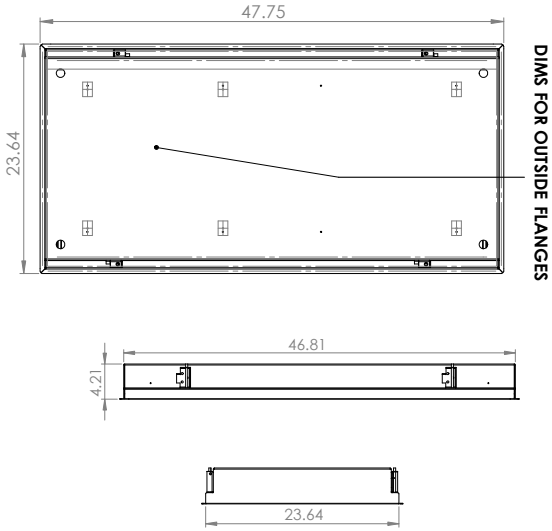

2x2

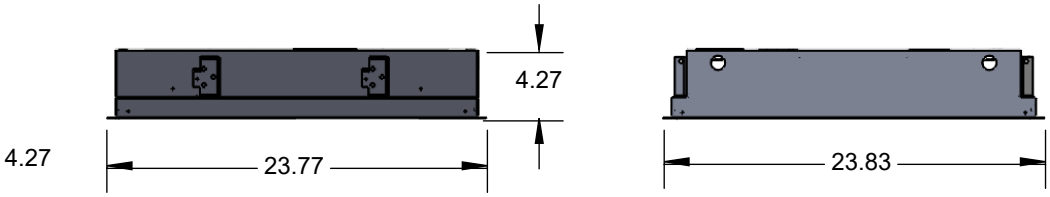

1x4