LED T5 FASTFIT TUBE

T5 Plug and Play Tube

Advantage. Environmental Lighting

The LED T5 FastFIT tube can work with specific T5 electronic ballast. This T5 FastFIT is a direct replacement for T5HO fluorescent tubes.

DIMENSIONS

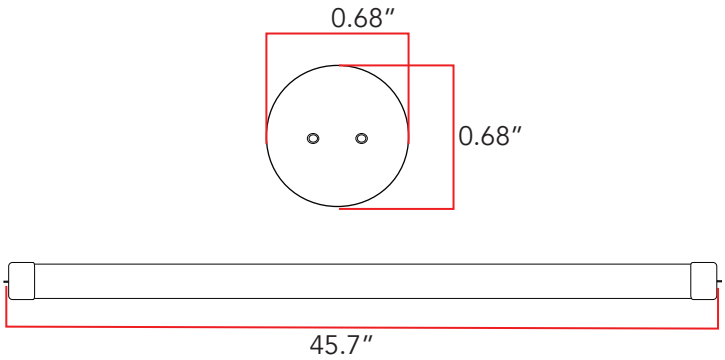

CERTIFICATIONS

c UL us LISTED E358956

RoHS COMPLIANT

FC NSF LED lighting facts LED Product Partner

FEATURES

- Compatible with programmable start T5HO electronic ballasts
- Stable lumen output for different ballast brand with different ballast factors
- Suitable for damp or dry environments
- Minimize labor and recycling costs
- No UV emission and no mercury
- UL Type A
- 5 Year Manufacturer's Warranty

COMMON TECHNICAL DATA

Color Temperature	4000K/5000K
Beam Angle	185 degrees
Color Consistency	4 Steps
CRI	> 80
Operation Temperature	-30°C to 40°C
Efficiency with Ballast	More than 120LPW
Input Voltage	AC100-277V
Frequency	50/60Hz
Power Factor	More than 0.99
Rated Life	50,000 hours
LED Type	SMT 2835
Housing	Alu(inside) & PC

WARRANTY

- 3 or 5 year warranty period specified in the contract for the product from the date of purchase
- Invoice or shipment bill is required to claim the warranty
- The warranty policy only requires manufacturer to repair the defective product or send substitute for replacement
- Installation labor, electricity cost and other related cost will not be covered by the manufacturer warranty policy
- Warranty doesn't cover the defect caused by inappropriate use, especially if directions of the instructions for use are not observed, normal abrasion as well as failures which affect the value or use of the product insignificantly.

(817) 468-3591 info@aelnow.com www.aelnow.com

Specifications subject to change without notice.

LED T5 FASTFIT TUBE

T5 Plug and Play Tube

Advantage. Environmental Lighting

PRODUCT SPECIFICATION

Product Number	Housing	Wattage	Length (FT)	Color	Lumens	Input Voltage
ALLD-T527W4FT	Alu+PC	27W	4FT	4000K/5000K	3780	AC100-277V

ORDERING GUIDE

ALLD	T5	27W	4FT	4000K/5000K
Product Code	Housing Type	Wattage	Length	CCT

INSTALLATION INSTRUCTIONS

Direct Replacement Procedure:

1. Turn OFF power to the fixture at the breaker panel before installation.
2. Open the diffuser from the light fixture.
3. Remove the fluorescent tubes (A) and dispose of these properly as they may contain mercury.
4. Put LED tube (B) into the lighting fixture and ensure the pins are firmly seated in lampholders.
5. Install the LED tubes and close the diffuser.
6. Switch ON power to the fixture at the breaker panel

(A)

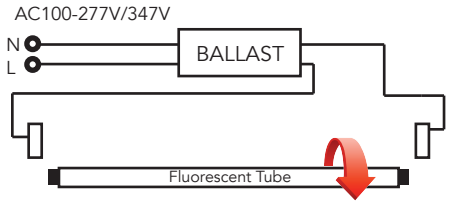

(B)

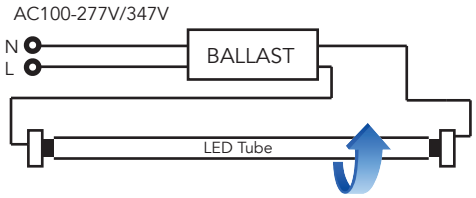

CAUTION

- Risk of fire- do not install this lamp in a pre-heated luminaire.
- Loose or damaged end caps and/or lamp holders need to be replaced before installation.
- Risk of electric shock- make installation with gloves.
- Use only in place of fluorescent lamps specified on label.
- These lamps are intended for use with emergency exists.
- These lamps are to be used with a light dimmer.
- If the lamp or luminaire exhibits undesirable operation (i.e. buzzing, flickering, etc.), immediately turn off power and remove the lamp from luminaire and contact manufacturer.
- This lamp only operates on electronic ballasts. If lamp does not light when the luminaire is energized, remove this lamp from luminaire and contact manufacturer.
- Check the ballast installed in the field and make sure the ballast is in manufacturer's ballast list. If the ballast out of the list, a test must needed before mass installation.
- Do not make mass installation before sample testing.