ADVANTAGE ENVIRONMENTAL LIGHTING

MADE IN THE USA

CATALOG #:

PROJECT:

TYPE:

# AEREM LED RECESSED EMERGENCY UNIT

STANDARD | OPTIONAL

UL LISTED · ALL LED · DAMP · BC · SELF DIAGNOSTIC

## ILLUMINATION

- *Ultra-bright, energy efficient, long-life White LED adjustable lamp heads provide up to 50-ft center-to-center spacing with a 3-ft path of egress at 12-ft mounting height.*
- *1.0 watt (1 LED x 1.0 watt) per head.*
- *Unique all-inclusive lamp, reflector, and lens assembly.*

## ELECTRICAL

- *Universal 120-277 voltage.*
- *Unique LED indicator light alerts occupant on battery condition (Red-normal, OFF-check battery).*
- *Charge rate/power "ON" LED indicator light and push-to-test switch for mandated code compliance testing.*
- *4.8V long-life, maintenance-free, rechargeable nickel metal hydride battery.*
- *Internal solid-state transfer switch automatically connects the internal battery to LED lamp heads for minimum 90-minute emergency illumination.*
- *Fully automatic solid-state, two rate charger initiates battery charging to recharge a discharged battery in 24 hours.*

## MOUNTING

- *Bar hangers included are compatible with drywall or drop ceiling mount installations.*

## HOUSING

- *Injection-molded, engineering grade, 5VA flame retardant, impact-resistant, thermoplastic in white or black finish.*
- *Injection-molded, engineering grade, 5VA flame retardant, thermoplastic oval and rectangle trim plates in white or black finish included.*

## OPTIONS

- *SDT: Self-diagnostic feature performs monthly, biannual, and annual tests to ensure reliable operation and meets electrical and life safety codes.*

## WARRANTY / LISTING

- *Five-year warranty on all electronics and housing. Battery pro rated for five years.*
- *Meets UL924, NFPA 101 Life Safety Code, NEC, OSHA, Local and State Codes.*
- *UL Listed for damp locations.(10°C – 40°C)*
- *Certified to CEC under title 20 regulations.*

## DIMENSIONS

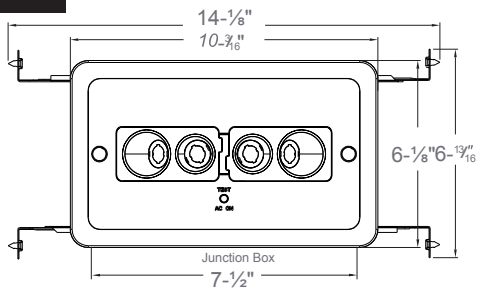


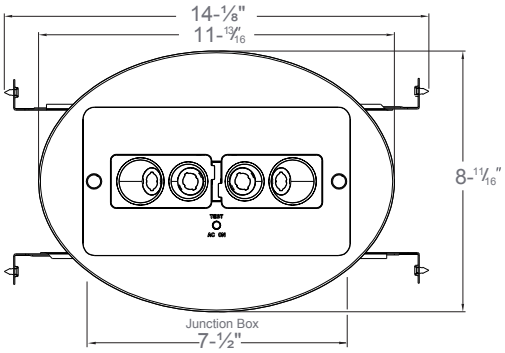


## ORDERING INFORMATION

*Sample Part Number:*

| MODEL | HOUSING COLOR | | OPTIONS | |
|---|---|---|---|---|
| AEREM | W | White | SDT | Self-Diagnostics |
| | B | Black | | |

817.468.3591 · aelnow.com · info@aelnow.com