ADVANTAGE ENVIRONMENTAL LIGHTING

MADE IN THE USA

CATALOG #:	
PROJECT:	
TYPE:	

AC10 AIRCRAFT CABLE SUSPENSION

APPLICATIONS: Lighting Products, Mechanical, & HVAC

FEATURES: Looping Gripper securely locks aircraft cable in a loop, & allows for quick tool-less adjustment

MATERIAL: Brass, with Steel Ball Bearings

FINISH: Bright Nickel Plated

CABLE DIMENSION: Accepts aircraft cable diameter in inches: X 1/16" X 3/64"

SAFE WORKING LOAD AT 5:1 SAFETY FACTOR: Specifications (US pounds) for 7x7 galvanized cable
1/16" Cable: . . . . . 67 lbs.
3/64" Cable: . . . . . 40 lbs.

CABLE ADJUSTMENT: Relieve load from cable, press plunger, & adjust cable height. Release plunger and Looping Gripper locks the cable.

INSTALLATION NOTES: Looping Gripper must maintain a minimum 2 inch distance from all suspended objects support structures.

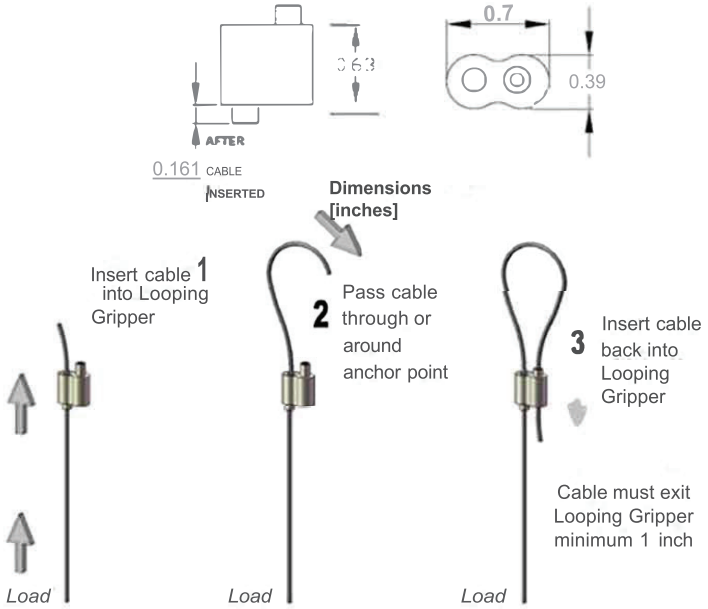

ADVANTAGE ENVIRONMENTAL LIGHTING

MADE IN THE USA

CATALOG #:

PROJECT:

TYPE:
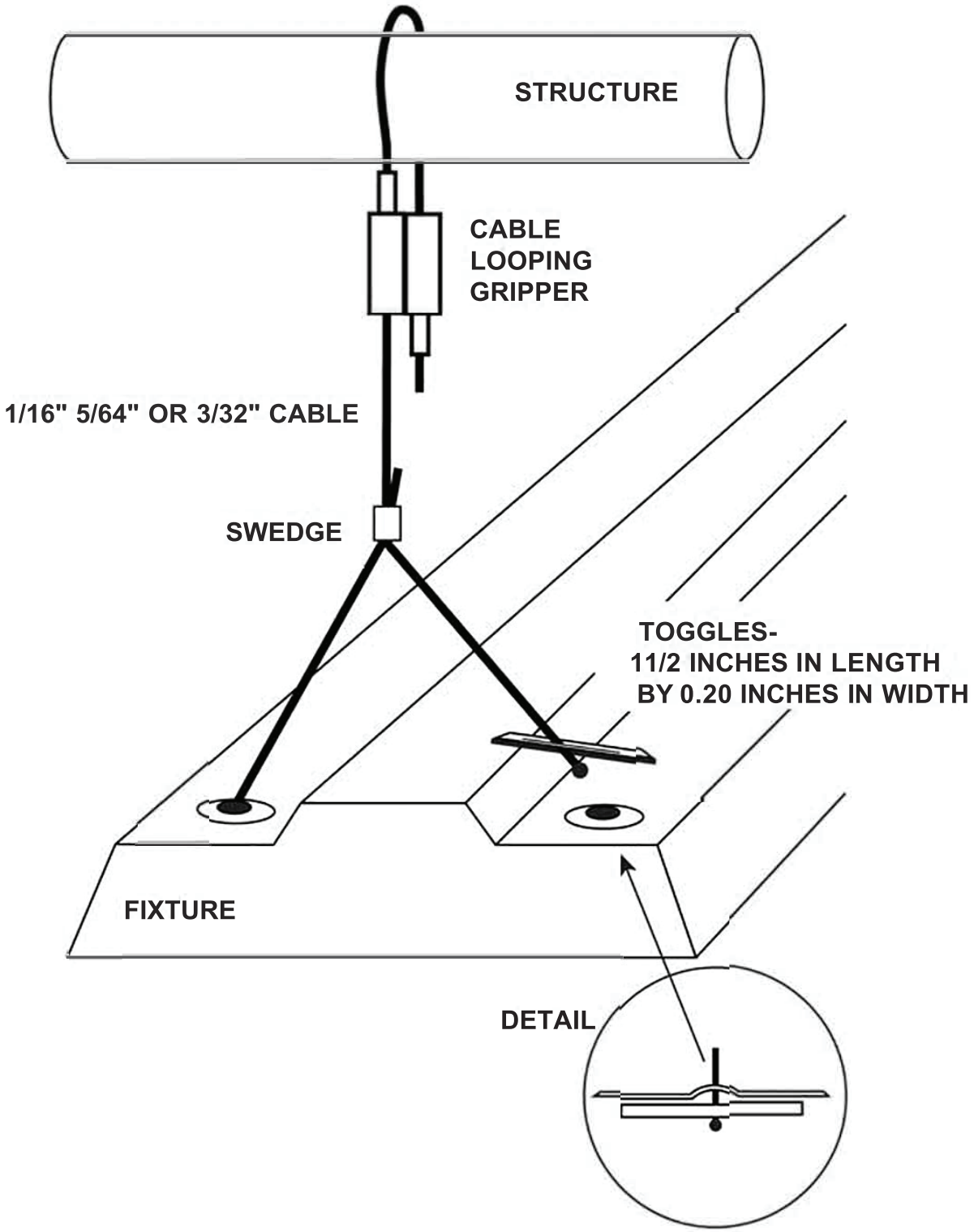
AIRCRAFT CABLE SUSPENSION