Advantage Environmental Lighting

Catalog Number	
Project	
Type	

2STL

2 Light Staggered Strip Wired For LED Tube's

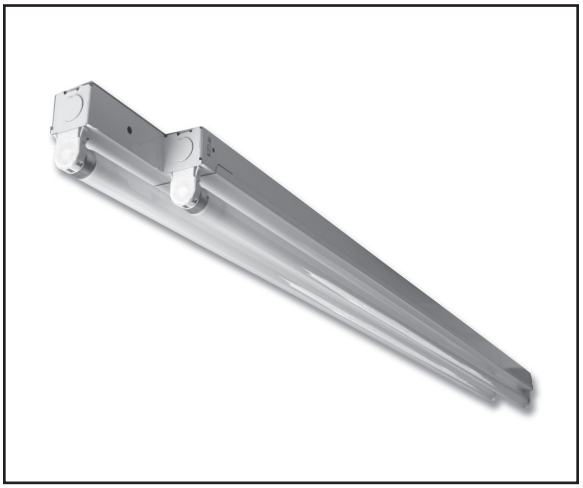

PRODUCT SPECIFICATIONS

DESCRIPTION

The 2STL Series is a 2 Lamp Staggered Strips Designed for LED Tube's available in 2' and 8' body lengths. It was designed for surface or suspended mounting applications.

APPLICATIONS

The 2STL Series for LED Tube's was designed to be high quality, energy efficient LED fixtures for use in commercial applications, offices, government facilities, schools, and public areas.

CONSTRUCTION

The fixture is constructed of a heavy gauge cold rolled steel body. 4" offset provides even, shadow-free lighting in continuous row installations.

OPTICAL SYSTEM

White polyester polymer finish with a high reflectivity.

MOUNTING

Surface or pendant mount, individually or in continuous rows. Sufficient knockouts are provided. Double KO access on 4 ft and longer to facilitate wiring of units for multiple ballast configurations.

LISTINGS

ETL and cETL Listed. Damp location rated.

WARRANTY

5-Year Limited Warranty. Complete warranty and terms located at: www.aelnow.com/warranty.

ORDERING INFORMATION

Example: 2STL30SM

2STL											
Series	**Number of Lamps**		**Length (IN)**		**Wire Application**		**LED**		**WT Wattage**		**WT Color Temp**	
2STL	**1**	1 Lamp	**17**	17W T8 (2")	**BLANK**	Single End Wiring*	**LED**	Wired for LED Lamps (Furnished by Others)	**10**	10 Watt 24" or 36"	**35**	3500K
	2	2 Lamps	**28T8**	28W T8 (51.65")	**DE**	Double End Wiring**	**WT**	With Tubes Included*	**12**	12 Watt 48"	**40**	4000K
			28T5	28W T5 (51.65")					**15**	15 Watt 36" or 48"	**50**	5000K
			32	32W T5 (51.65")					**18**	18 Watt 48"		
			54	54W T5HO (51.65")					**20**	20 Watt 48"		
								Be sure and select correct Tube wattage when choosing **WT*				

*Non-Shunted Sockets Wired at One End (Blank)
**Shunted Sockets Wired with White, Opposite End Wired with Black (DE)

Emergency Options		Hanging Options	
12EBL	1200 Lumen Emergency Ballast	**(blank)**	None
		AC10	Aircraft Cable 10'
		AC15	Aircraft Cable 15'
		AC20	Aircraft Cable 20'
		JC10	Jack Chain 3pc @ 10' W/ S Hooks
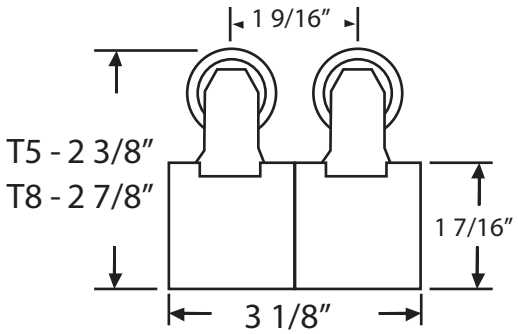
FIXTURE DIMENSIONS