ROUGH IN SIZE LISTED BELOW.
Please pay careful attention to these dimensions.

1x4

ROUGH IN SIZE TO BE 46 11/16" X 10 5/8"

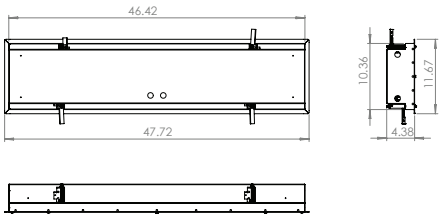

2x2

ROUGH IN SIZE TO BE 22 5/8" X 22 5/8"

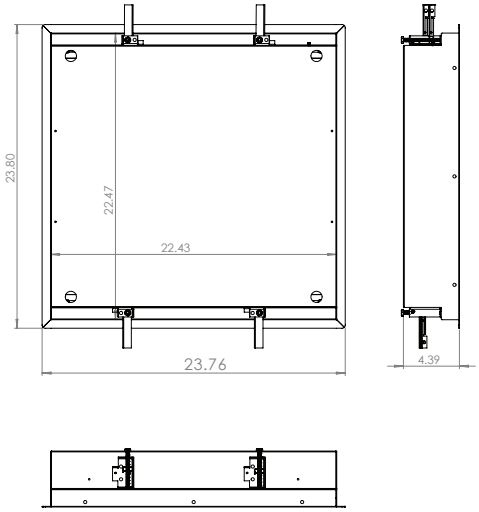

2x4
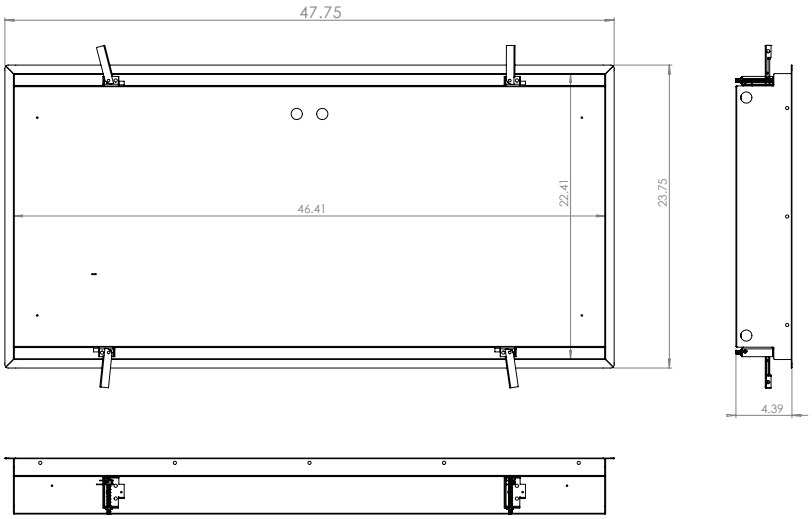
ROUGH IN SIZE TO BE 46 5/8" X 22 11/16