ADVANTAGE ENVIRONMENTAL LIGHTING

CATALOG #:	
PROJECT:	
TYPE:	

ROUGH IN SIZE LISTED BELOW.
Please pay careful attention to these dimensions.

DIMENSIONS

1x1

ROUGH IN SIZE 10 13/16" X 10 3/4"

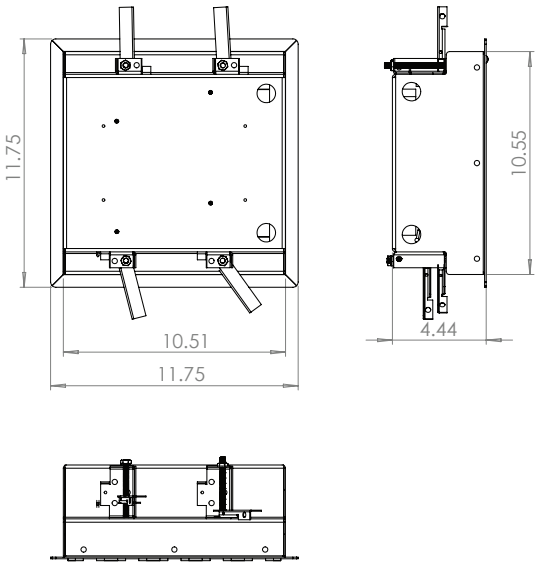

2x4

ROUGH IN SIZE TO BE 46 5/8" X 22 11/16

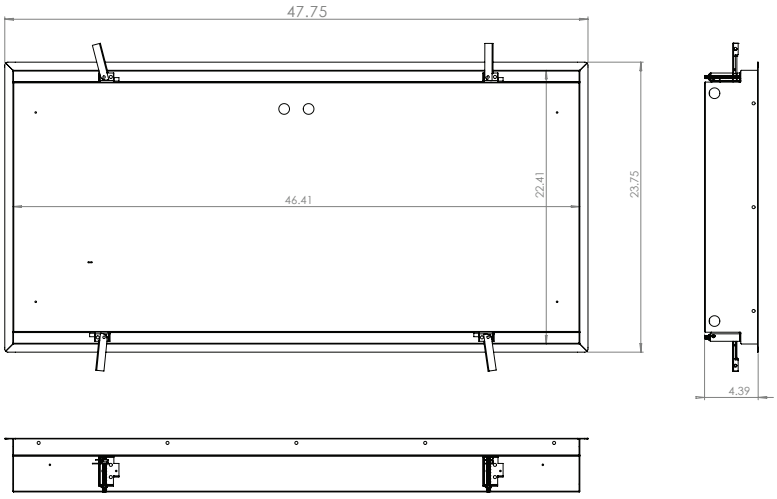

2x2
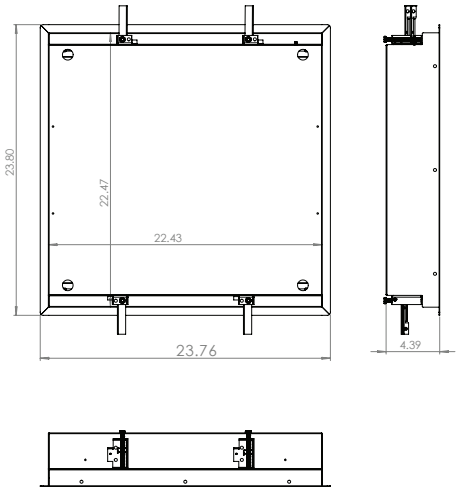
ROUGH IN SIZE TO BE 22 5/8" X 22 5/8"