ADVANTAGE ENVIRONMENTAL LIGHTING

MADE IN THE USA

CATALOG #:

PROJECT:

TYPE:

BAE SURFACE MOUNT LED PRISON GRADE

BASTILLE PRISON GRADE

The **BAE** is a maximum security, prison grade, surface mount luminaire. The BAE can be both ceiling- or wall-mounted. Engineered with a low-profile clamshell housing, while utilizing inner/outer lenses and tamper resistant fasteners for impact resistance and penetration, and to prevent contraband concealment. The BAE is ideal for correctional and high abuse applications, such as inmate cells, psychiatric wards, secure corridors and general population areas. Available with knockouts for continuous run.

FASTENERS: Comes standard with stainless steel tamper-resistant T25 TORX® screws. Allenhead screws with center reject pin are available with option AH.

ELECTRICAL SYSTEM: 0-10V 1% Dimming driver included standard. Long-life LED system rated for >100K life hours (L70 @ 25° C). Metal gear tray for internal LED driver. Complies with federal energy efficiency standards.

OPTICAL SYSTEM: Various lensing options available for inner/outer lens. If additional lens options are needed, consult factory. The lens is secured by thru-studs and vertically adjustable internal hold-downs.

LISTINGS: Designed for damp locations, and Wet Location is available as an option (see next page). UL Listed.

FINISH: High gloss, electrostatically applied, white powder coat finish, average minimum reflectance 92%.

HOUSING: Cold roll or stainless steel body available in various gauges. Designed with continuous welded and ground ends to form a one-piece, seamless, doorless housing which maximizes impact resistance, prevents contraband concealment, and unauthorized fixture penetration. Tamper proof screws allow for maintenance while preventing fixture access or weapon fabrication.

LED: 80 CRI or 90 CRI LEDs available in 2700K, 3000K, 3500K, 4000K and 5000K. Life is >100,000 hours at 70% lumen maintenance.

BACKPLATE: Die-formed backplate creates an irretrievable blade trap that prevents contraband concealment.

WARRANTY: 5-Year Limited Warranty. Complete warranty and terms located at: **www.aelnow.com/warranty**

Ordering Information on Next Page

ADVANTAGE ENVIRONMENTAL LIGHTING

CATALOG #:

PROJECT:

TYPE:

ORDERING INFORMATION:

Example: BAE-2-30-15L-B18-156P-N-M

SERIES	SIZE	CCT	OUTPUT	HOUSING MATERIAL	OUTER LENS
BAE	2' 4'	27 2700K 30 3000K 35 3500K 40 4000K 50 5000K	4L 4000 Lumens (Standard Low) 7L 7000 Lumens (Medium Low) 11L 11000 Lumens (High Low) 12L 12000 Lumens (Standard Medium) 13L 13000 Lumens (Medium Medium) 15L 15000 Lumens (High Medium) 16L 16000 Lumens (Standard High) 20L 20000 Lumens (Medium High) 25L 25000 Lumens (High High) XX Custom Lumens	B12 12 Gauge Cold Rolled Steel B14 14 Gauge Cold Roll Steel B16 16 Gauge Cold Roll Steel B18 18 Gauge Cold Roll Steel B20 20 Gauge Cold Roll Steel SH14 14 Gauge Stainless Steel SH16 16 Gauge Stainless Steel SH18P 18 Gauge Stainless Steel (Painted) SHB14 14 Gauge Stainless Steel (Brushed) SHB16 16 Gauge Stainless Steel (Brushed) SHB18 18 Gauge Stainless Steel (Brushed)	N No Lens 125P .125 Clear Polycarbonate 156P .156 Clear Polycarbonate 187P .187 Clear Polycarbonate 250P .250 Clear Polycarbonate 375P .375 Clear Polycarbonate CTG187 .187 Clear Tempered Glass CTG250 .250 Clear Tempered Glass CTG375 .375 Clear Tempered Glass

INNER LENS	VOLTAGE	DRIVER	OPTIONS
N No Lens PA125 .125 Prismatic Acrylic PA156 .156 Prismatic Acrylic FA .125 Frosted Acrylic PP125 .125 Prismatic Polycarbonate PP187 .187 Prismatic Polycarbonate CTG/PA .156 Prismatic Tempered Glass SY Symmetric Diffused Frosted DR Acrylic	M 120/277V	BLANK 0-10V 1% Dimming Driver (included standard) CD5 0-10V 5% to Off Dimming Driver EDN Electronic Driver Non-Dimming DALI 1% Dimming Driver LDE1 Lutron Hi-lume 1% EcoSystem LED driver with Soft-on, Fade-to-Black dimming technology	14EBL 14 Watt Emergency Ballast AH Allenhead Screws with Center Pin Reject LN LED Night Light FZ Fuse Holder UV .005 UV Absorbing Overlay PF Plaster Frame & Yoke CB Cross Bar 90 90 CRI VDO Lutron Vive Integral RF controller (with daylight and occupancy sensing) WL Wet Location* PH 16 Gauge Full Length Piano Hinge Door Frame CR Continuous Run (Consult factory for details)

**For Wet Location, pick-proof sealant caulk must be used.*

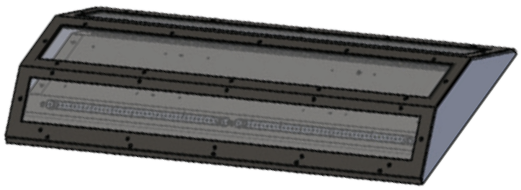

Dimensions on Next Page ►

ENERGY AND PERFORMANCE DATA

INPUT VOLTAGE:	120/277VAC
SYSTEM INPUT POWER:	27.8 - 173.4 WATTS*
DELIVERED LUMEN OUTPUT:	4000 - 25000 LUMENS
STANDARD DIMMING CONTROL:	0-10V
CCT:	3000, 3500, 4000, 5000 KELVIN
CRI:	82 (MINIMUM)
LIFE TIME RATING:	>100,000 HRS @ L70
INPUT FREQUENCY:	50/60 HZ
POWER FACTOR:	>0.9
OPERATING TEMP:	-30° TO 50° C

*ACTUAL WATTAGE MAY DIFFER BY ±5% WHILE OPERATING 120/277V ±10%

APPROXIMATE COLOR TEMPERATURE MULTIPLIER

5000K	X	1.03
4000K	X	1
3500K	X	.97
3000K	X	.94
2700K	X	.91

OUTPUT	DELIVERED LUMENS	WATTS	L70 @20C (HRS)
4L	4000 LUMENS	27.8	>100K
7L	7000 LUMENS	48.5	>100K
11L	11000 LUMENS	79.3	>100K
12L	12000 LUMENS	83.2	>100K
13L	13000 LUMENS	90.1	>100K
15L	15000 LUMENS	104	>100K
16L	16000 LUMENS	110.1	>100K
20L	20000 LUMENS	138.7	>100K
25L	25000 LUMENS	173.4	>100K

ADVANTAGE ENVIRONMENTAL LIGHTING

CATALOG #:

PROJECT:

TYPE:
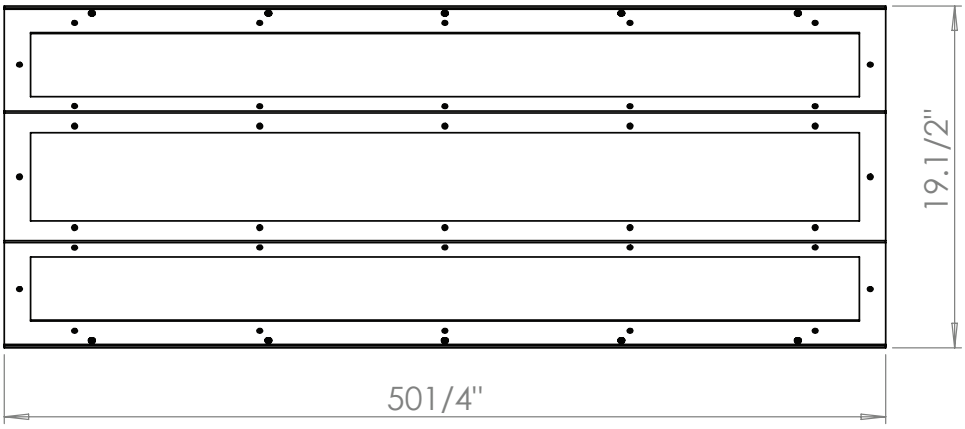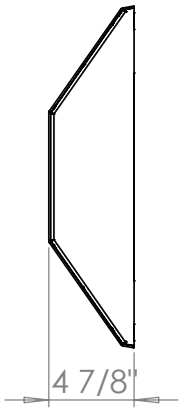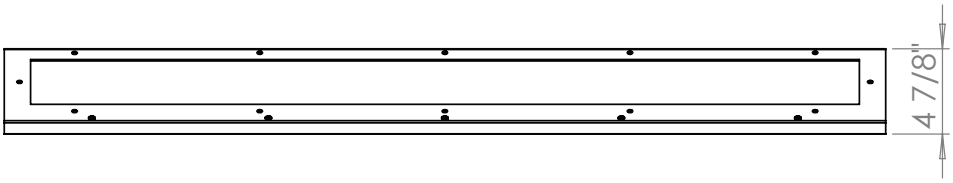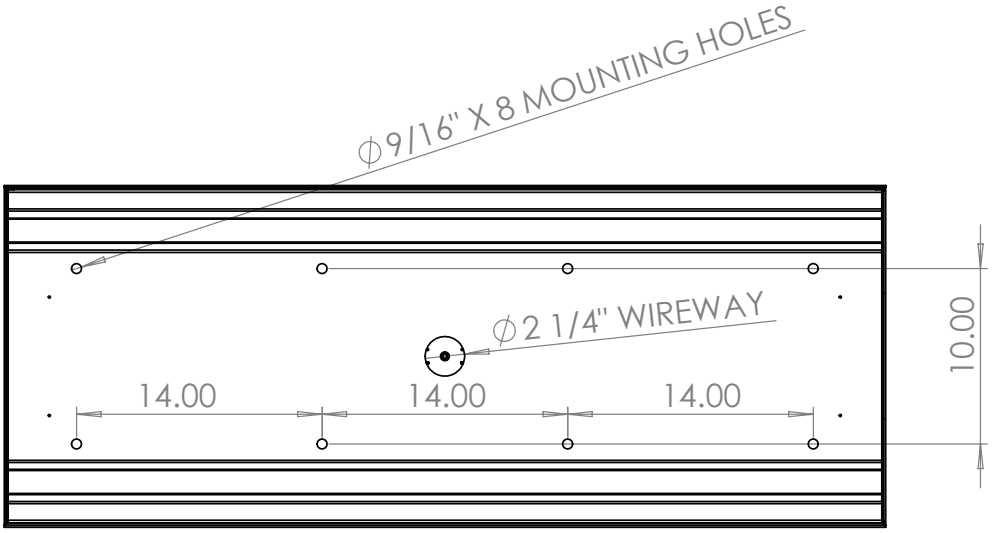
DIMENSIONS